FED. SUP CLASS
5935

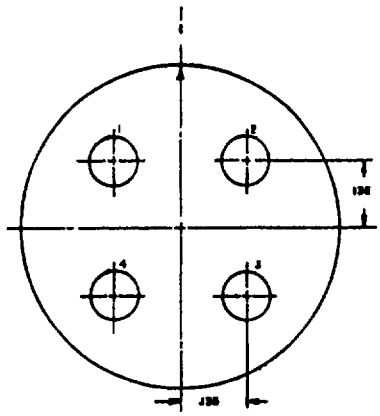

CONTACT (4) 12
SERVICE RATING 12

INSERT ARR 19-4

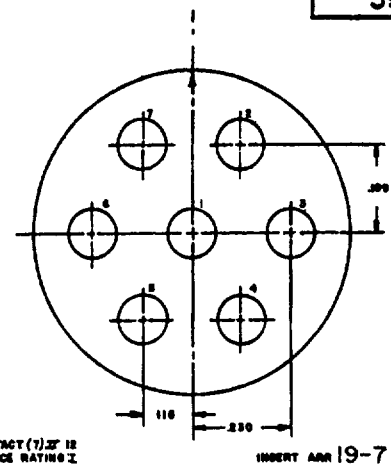

CONTACT (7) 22 12
SERVICE RATING I

INSERT ARR 19-7

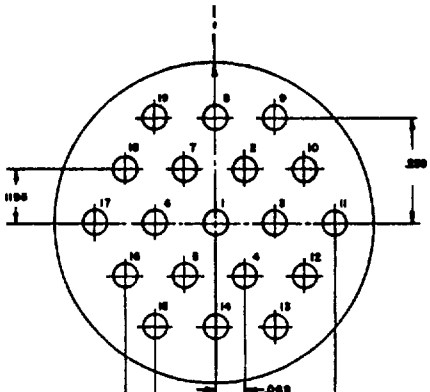

CONTACT (18) 20
SERVICE RATING I

INSERT ARR 19-50(c)

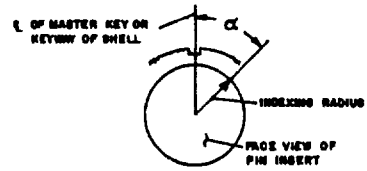

INSERT POSITION FIGURE

INSERT ARR	INSERT POSITIONS α DEGREES (a)					
		ALTERNATE POSITIONS				
	NORMAL	W	X	Y	B	C
(c) 19-50	0°	(b)	(b)	78°	150°	228°
19-4	0°	(b)	(b)	22 1/2°	135°	247 1/2°
19-7	0°	(b)	(b)	78°	150°	228°

(a) ▲ TO BE WITHIN .005 INCHES OF THE REQUIRED POSITION

(b) THESE INSERT POSITIONS ARE NOT TO BE PROVIDED

(c) INSERT ARR 19-50 SUPERSEDES AND IS INTERCHANGEABLE WITH INSERT ARR. 19

DIMENSIONS AND MARKINGS SHOWN ARE FOR FRONT FACE OF PIN INSERT (SOCKET INSERT OPPOSITE), UNLESS OTHERWISE INDICATED, DIMENSIONS ARE SYMMETRICAL ABOUT CENTERLINE

⌒ INDICATES "MASTER KEY OR KEYWAY OF SHELL"

▲ INDICATES TERMINUS OF "INDEXING RADIUS OF INSERT

IN NORMAL POSITION THE INDEXING RADIUS COINCIDES WITH ℄ OF THE "MASTER KEY OR KEYWAY OF SHELL"

IN ALTERNATE POSITIONS THE PIN INSERT IS ROTATED α DEGREES CLOCKWISE RELATIVE TO ℄ OF THE MASTER KEY OR KEYWAY OF SHELL" AS INDICATED

IN ALTERNATE POSITIONS THE SOCKET INSERT IS ROTATED α DEGREES COUNTER-CLOCKWISE RELATIVE TO ℄ OF THE MASTER KEY OR KEYWAY OF SHELL"

DIMENSIONS IN INCHES ANGLES IN DEGREES TOLERANCES DECIMALS ± .005

THIS IS A DESIGN STANDARD. NOT TO BE USED AS A PART NUMBER

FOR DESIGN FEATURE PURPOSES THIS STANDARD TAKES PRECEDENCE OVER PROCUREMENT DOCUMENTS REFERENCED HEREIN

REFERENCE DOCUMENTS SHALL BE OF THE ISSUE IN EFFECT ON DATE OF INVITATIONS FOR BID

RECEPTACLES (Ref)

MS3130
MS3132
MS3134
MS3139
MS3140
MS3143
MS3144
MS3145
MS3149
MS3424
MS3463
MS3464
MS3466
MS3469

PLUGS (Ref)

MS3137
MS3138
MS3147
MS3148
MS3446
MS3467
MS3468
MS3445

APPROVED 14 MAY 59 — REVISED (A) 28 FEB 61 (B) 6 SEPT 62 (C) 1 OCT 62 (D) 1 JUL 64 (E) 1 NOV 1965 (F) 31 Oct 1969 (G) 21 July 1971

P A NAVY-AS Other Cust	International Interest	TITLE INSERT ARRANGEMENTS, ELECTRIC CONNECTOR, SHELL SIZE 19	MILITARY STANDARD MS 33701 (NAVY)
Procurement Specification MIL-C-81703		SUPERSEDES	SHEET 1 OF 2

DD FORM 10 APR 64 672 — PREVIOUS EDITIONS OF THIS FORM ARE OBSOLETE — 5935-N668-20

(Limited Coordination)

This standard has been approved by the Department of the NAVY and is mandatory for use by that activity. All other military activities are required to employ this standard where suitable

FED SUP CLASS
5935

CONTACTS
SERVICE RATING — INSERT ARR —

CONTACTS
SERVICE RATING — INSERT ARR —

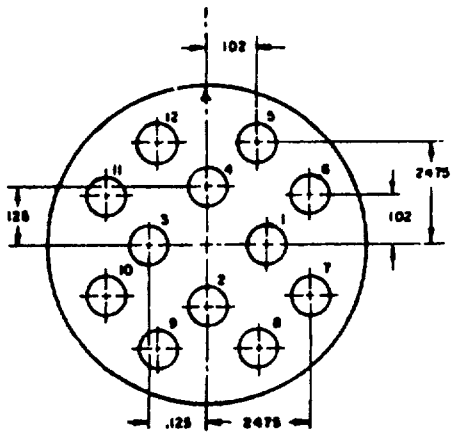

CONTACTS (2) #16
SERVICE RATING I — INSERT ARR 19-12

CONTACTS
SERVICE RATING — INSERT ARR —

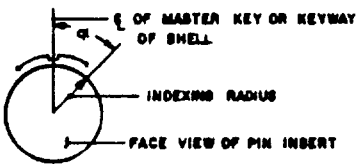

INSERT POSITION FIGURE

INSERT ARR	NORMAL	ALTERNATE POSITIONS — INSERT POSITIONS at DEGREES (a)					
		W	X	Y	Z	D	C
19-12	0°	20°	60°	70°	(b)	160°	220°

(a) ↑ TO BE WITHIN .005 INCH OF THE REQUIRED POSITION
(b) THESE INSERT POSITIONS ARE NOT TO BE PROVIDED

NOTES:

APPROVED 14 MAY 59 REVISED (F) FOR CHANGES SEE SHEET 1 (G) 21 July 1971

P A NAVY-AS Other Cust	International Interest	TITLE INSERT ARRANGEMENT, ELECTRIC CONNECTOR, SHELL SIZE 19	MILITARY STANDARD MS 33701(NAVY)
Procurement Specification MIL-C-81703		SUPERSEDES:	SHEET 2

DD FORM 10 APR 64 672 — PREVIOUS EDITIONS OF THIS FORM ARE OBSOLETE

(Limited Coordination)

This standard has been approved by the Department of the NAVY and is mandatory for use by that activity. All other military activities are required to employ this standard where suitable.