FED. SUP CLASS
5935

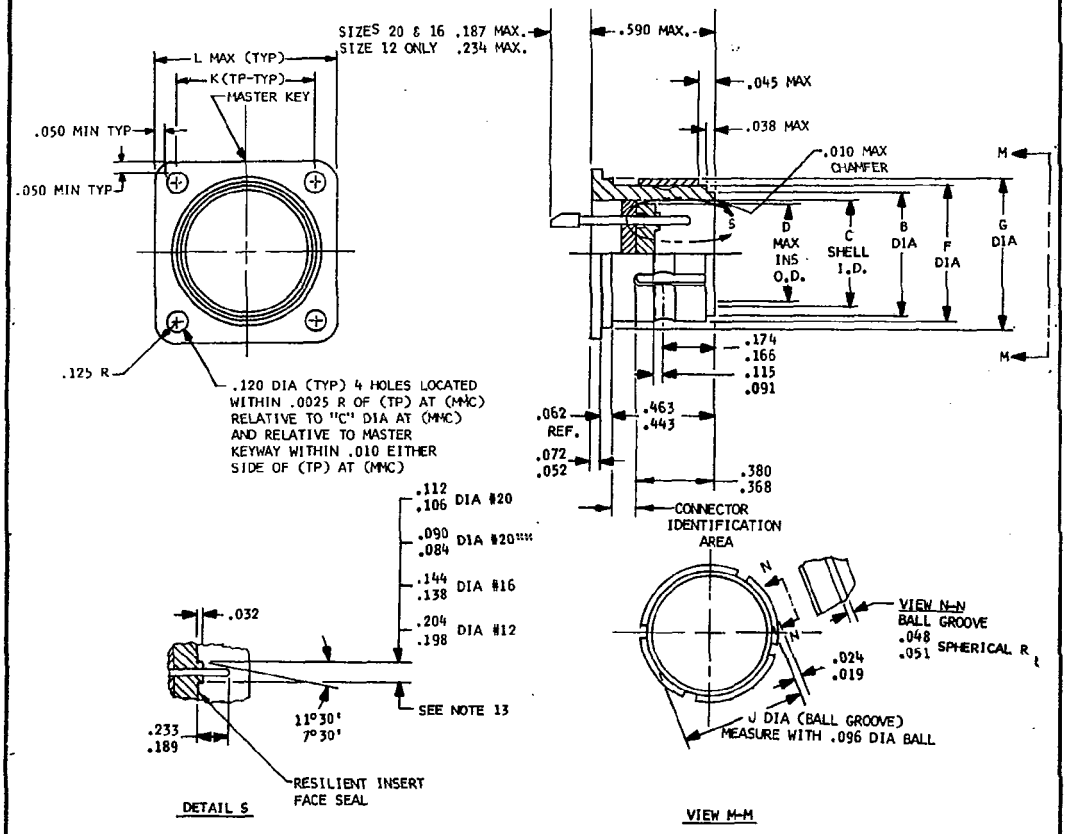

FIGURE 1
CONNECTOR VIEW

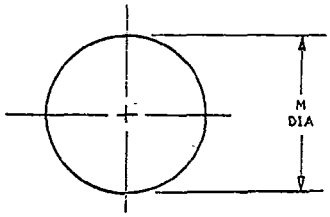

PANEL CUTOUT

***ON OUTER ROW CONTACTS OF INSERT ARRANGEMENTS INDICATED IN CHART.

PART NUMBER EXAMPLE:

MS3466 H 7 - 50 P B

- B — ALTERNATE INSERT POSITION
- P — CONTACT STYLE (P-PIN)
- 50 — INSERT ARRANGEMENT
- 7 — SHELL SIZE
- H — CLASS
- MS3466 — MS NUMBER

INSERT ARRANGEMENTS REQUIRING REDUCED DIAMETERS FOR PIN CONTACT RAISED SEAL BARRIERS.		
SHELL SIZE	INSERT ARRANGE-MENTS	CONTACT CAVITIES
12	12 - 50	5, 6, 8, 9, 11 AND 12

APPROVED 21 July 1971 REVISED

P.A. NAVY-AS	International interest	TITLE	MILITARY STANDARD
Other Cust		CONNECTOR, RECEPTACLE, ELECTRIC, HERMETIC, SOLDER TYPE, BOX MOUNTING, PUSH-PULL COUPLING, SERIES 3 (CLASS H)	MS 3466(NAVY)
Procurement Specification MIL-C-81703		SUPERSEDES:	SHEET 1 OF 3

DD FORM 10 APR 64 672 PREVIOUS EDITIONS OF THIS ETE. 5935-N668-10

(Limited Coordination)

This standard has been approved by the Department of the NAVY and is mandatory for use by that activity. All other military activities are required to employ this standard where suitable.

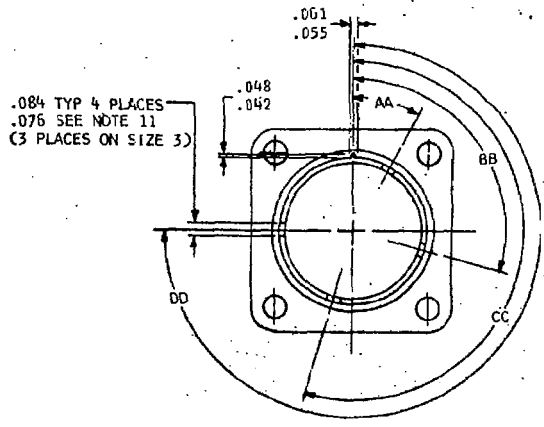

FIGURE II
KEYWAY POSITIONS

TERMINATION END OF CONTACTS

ENGAGING END OF CONTACTS

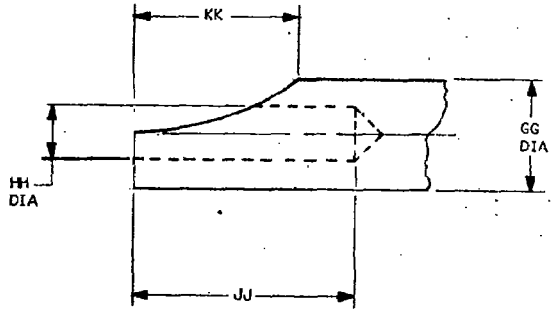

SOLDERPOT

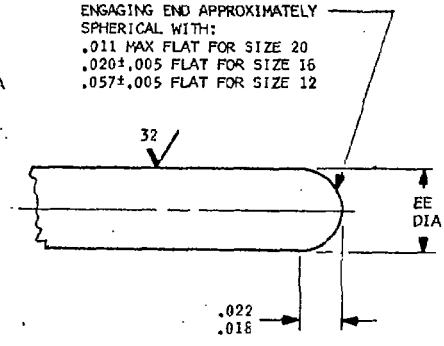

SIZE 20 ENGAGING END
(OPTIONAL)

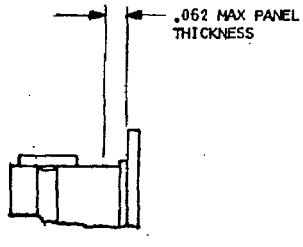

FIGURE IV
MAX PANEL THICKNESS (TYP)

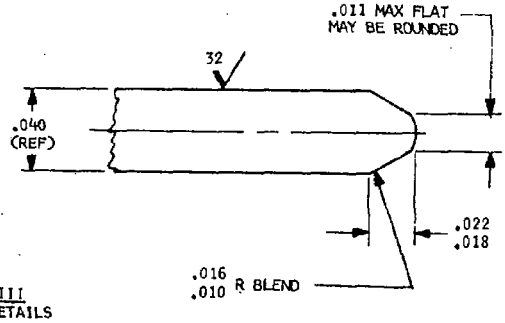

FIGURE III
CONTACT DETAILS

APPROVED 21 July 1971 REVISED

P.A. NAVY-AS	International Interest	TITLE	MILITARY STANDARD
Other Cust		CONNECTOR, RECEPTACLE, ELECTRIC, HERMETIC, SOLDER TYPE, BOX MOUNTING, PUSH-PULL COUPLING, SERIES 3 (CLASS H)	MS3466(NAVY)
Procurement Specification MIL-C-81703		SUPERSEDES:	SHEET 2

This standard has been approved by the Department of the NAVY and is mandatory for use by that activity. All other military activities are required to employ this standard where suitable.

FED. SUP CLASS
5935

TABLE I
CONNECTOR DIMENSIONS AND WEIGHTS

SHELL SIZE	B	C	D	F	G	J	K	L
3	.392 .385	.367 .356	.330	.441 .431	.549 .529	.399 .391	.625	.891
7	.527 .520	.483 .473	.451	.576 .566	.682 .662	.534 .526	.719	1.016
12	.661 .654	.624 .614	.553	.710 .700	.822 .802	.669 .661	.813	1.109
19	.800 .793	.763 .753	.738	.849 .839	.947 .927	.807 .799	.906	1.203
27	.955 .948	.918 .908	.854	1.004 .994	1.130 1.110	.962 .954	.968	1.297
37	1.077 1.070	1.040 1.030	.978	1.126 1.116	1.228 1.208	1.084 1.076	1.187	1.453
61	1.365 1.358	1.316 1.306	1.271	1.414 1.404	1.510 1.490	1.367 1.360	1.436	1.797

SHELL SIZE	M	WEIGHT (LBS) SEE NOTE 7 PIN INSERT
3	.583	(WEIGHT WILL BE SUPPLIED IN LATER REVISION)
7	.760	
12	.885	
19	1.010	
27	1.141	
37	1.271	
61	1.583	

TABLE II
KEYWAY POSITIONS

SIZE	AA	BB	CC	DD
3	23°	97°	187°	—
7	23°	97°	187°	277°
12	30°	105°	195°	270°
19	30°	105°	195°	270°
27	30°	105°	195°	270°
37	30°	105°	195°	270°
61	30°	105°	195°	270°

TABLE III
CONTACT DIMENSIONS

CONT SIZE	EE	GG	HH	JJ	KK
20	.041 .039	.088 .061	.058 .052	.188 .109	.110 .068
16	.0635 .0615	.116 .096	.078 .072	.251 .172	.141 .109
12	.095 .093	.150 .130	.122 .110	.251 .172	.143 .109

NOTES: (NOTES 1 THRU 6 APPLICABLE TO CONTACTS ONLY).

1. CONTACT FINISH: GOLD PLATE .000050 INCH MIN IN ACCORDANCE WITH MIL-G-45204. A SUITABLE UNDERPLATING MAY BE USED. SILVER UNDERPLATING SHALL NOT BE USED. FINISH IS APPLIED AFTER SEALING.
2. DIMENSIONS IN INCHES, DIMENSIONS APPLY AFTER PLATING.
3. 63 ALL OVER PER ASA-B46.1-1962 UNLESS OTHERWISE SPECIFIED.
4. REMOVE ALL BURRS AND SHARP EDGES .003 TO .005 R.
5. DIAMETERS TO BE CONCENTRIC WITHIN .004 TIR.
6. DIAMETERS IN THE SAME CROSS-SECTIONAL PLANE TO BE CONCENTRIC WITH EACH OTHER WITHIN .003 TIR.
7. WEIGHT LISTED IS CONNECTOR MAXIMUM WEIGHT PER SHELL SIZE.
8. SHELL MATERIAL: COLD ROLLED STEEL, PER QQ-S-637.
9. SHELL FINISH: .0001 MIN. TIN PER MIL-T-10727, OVER NICKEL PER QQ-N-290.
10. EACH CONNECTOR SHALL BE PACKAGED WITH A PLASTIC DUST CAP OVER EACH END OF SHELL.
11. FOUR KEYWAYS (MMC) AND INSERT SHALL BE LOCATED WITHIN .004 EITHER SIDE OF (TP) RELATIVE TO MASTER KEYWAY (MMC) AND SHELL O.D. (MMC).
12. DIMENSIONS IN INCHES. UNLESS OTHERWISE SPECIFIED, TOLERANCE SHALL BE .XX ± .010 AND .XXX ± .005; ANGULAR TOLERANCE, X° ±1°-0' AND X°X' ± 30'.
13. DIAMETERS SHOWN ARE AT BASE OF BARRIERS.

APPROVED 21 July 1971 REVISED

P.A. NAVY-AS Other Cust	International interest	TITLE CONNECTOR, RECEPTACLE, ELECTRIC, HERMETIC, SOLDER TYPE, BOX MOUNTING, PUSH-PULL COUPLING, SERIES 3 (CLASS H)	MILITARY STANDARD MS 3466(NAVY)
Procurement Specification MIL-C-81703		SUPERSEDES:	SHEET 3

DD FORM 10 APR 64 672

(Limited Coordination)

This standard has been approved by the Department of the NAVY and is mandatory for use by that activity. All other military activities are required to employ this standard where suitable.