INCH-POUND

MIL-C-83526/12(CR)
9 JUNE 1989

MILITARY SPECIFICATION SHEET

CONNECTOR, FIBER OPTIC, CIRCULAR, HERMAPHRODITIC, IN-LINE MOUNTING, 2 POSITIONS

This specification is approved for use by the Department of the Army and is available for use by all Departments and Agencies of the Department of Defense.

The requirements for acquiring the product described herein shall consist of this specification sheet and the issue of the following specification listed in that issue of the Department of Defense Index of Specifications and Standards (DODISS) specified in the solicitation: MIL-C-83526

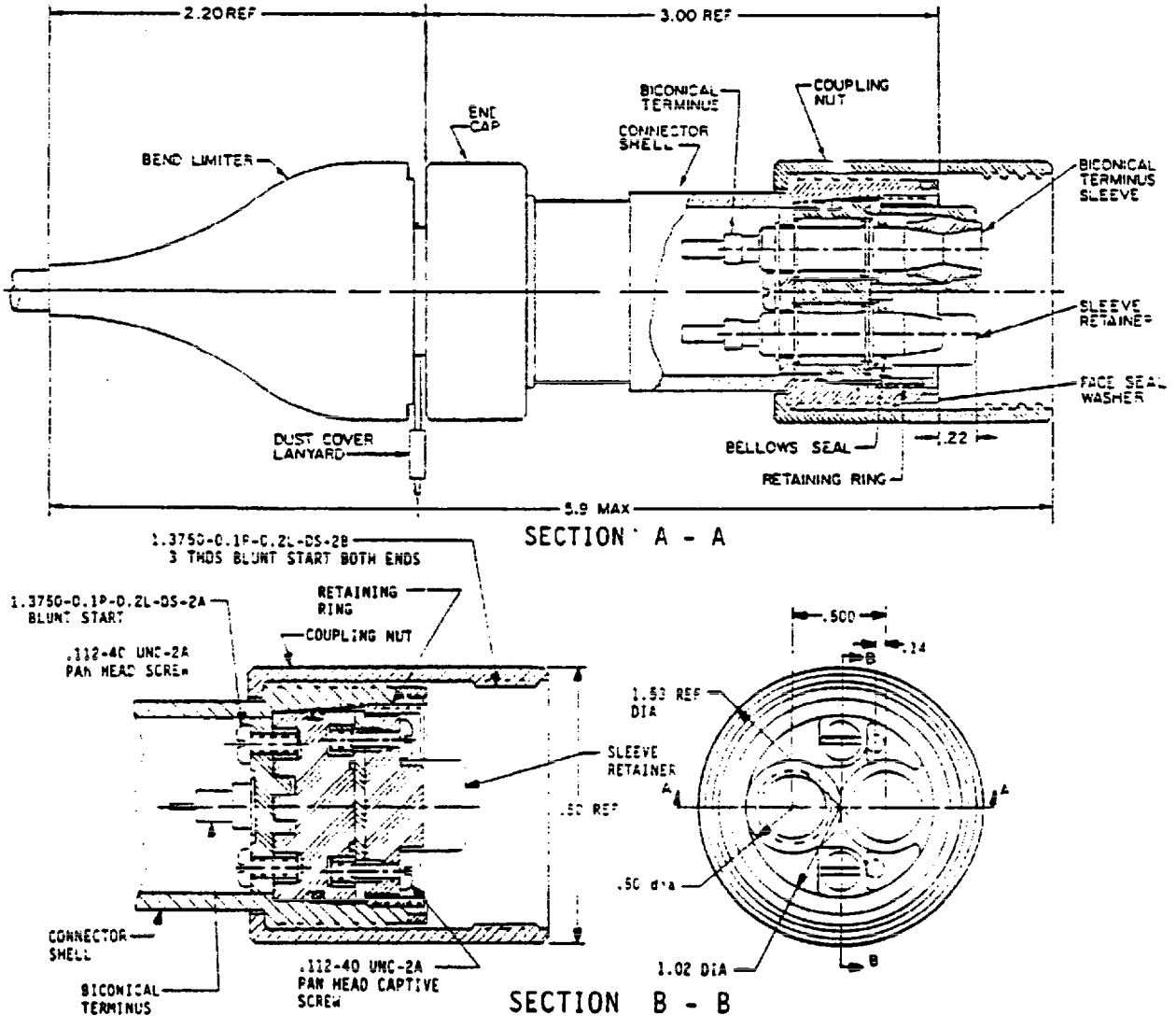

FIGURE 1. In-line connector.

DISTRIBUTION STATEMENT A. Approved for public release; distribution is unlimited.

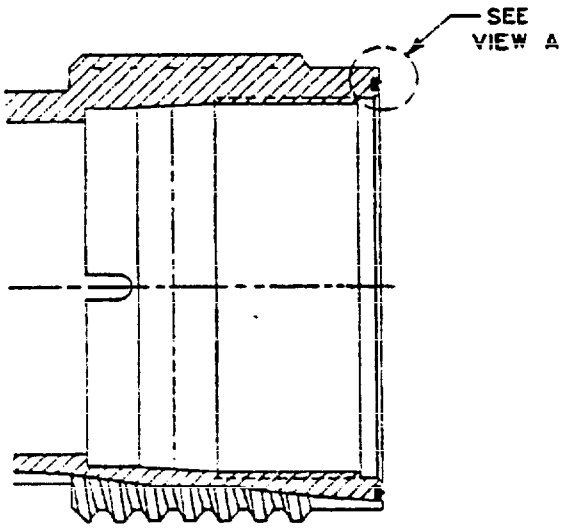

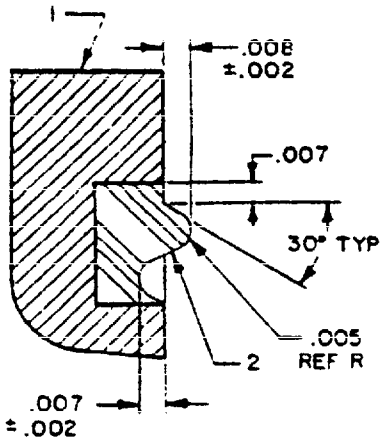

VIEW A

FACE SEAL WASHER DETAIL

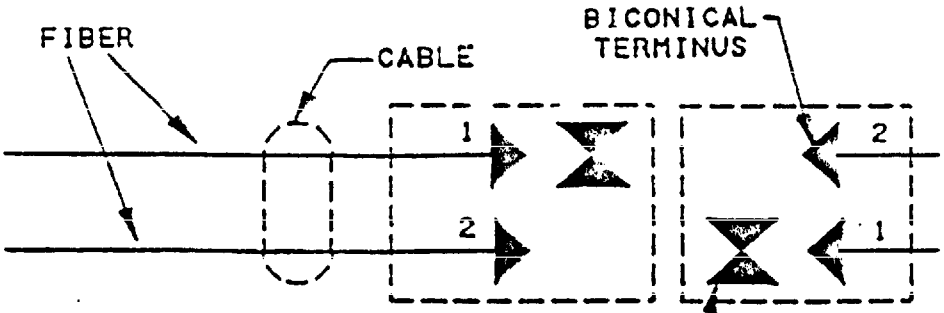

SCHEMATIC

Inches	mm	Inches	mm
.002	0.05	1.02	25.9
.007	0.18	1.3750	34.925
.008	0.20	1.53	38.86
.112	2.84	2.20	55.9
.14	3.56	3.09	76.2
.2	5.08	5.9	149.9
.22	5.59		
.50	12.7		
.56	14.2		

NOTES:
1. Dimensions are in inches.
2. Metric equivalents are given for general information only.
3. Unless otherwise specified, tolerances are ±.010 (0.25 mm) for three place decimals, ±.03 (0.8 mm) for two place decimals and ±.1 (2.5 mm) for one place decimals. Angular tolerances are ±0° 30'.
4. Unless otherwise specified, dimensions are symmetrical about centerlines.
5. The part number shall be placed on the connector shell.

FIGURE 1. In-line connector - Continued.

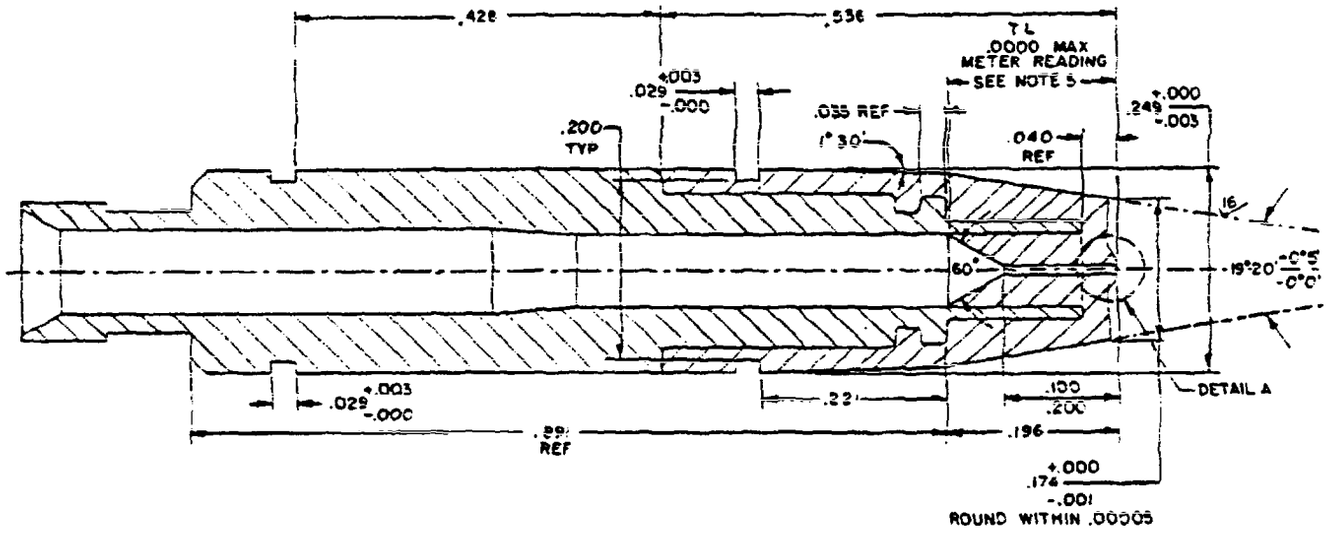

Inches	mm	Inches	mm
.000	0.0	.196	4.98
.001	0.03	.200	5.08
.003	0.08	.220	5.59
.005	0.13	.221	5.61
.029	0.74	.249	6.32
.035	0.89	.250	6.35
.100	2.54	.428	10.9
.174	4.42	.536	13.6
		.891	22.6

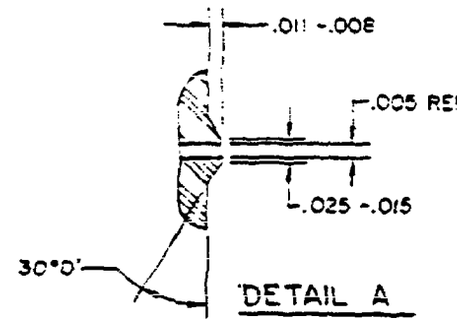

NOTES:
1. Dimensions are in inches.
2. Metric equivalents are given for general information only.
3. Unless otherwise specified, tolerances are ±.002 (0.05 mm) for three place decimals, ±.03 (0.8 mm) for two place decimals and ±.1 (2.5 mm) for one place decimals. Angular tolerances are ±0° 30'.
4. Unless otherwise specified, dimensions are symmetrical about centerlines.
5. TL (taper length) on the biconical terminus relates to the taper length established by the terminus taper length gauge standard.
6. There shall be no part line in this area.
7. Dimensions apply after post curing at 150°C for three hours.

BICONICAL TERMINUS

FIGURE 2. Biconical terminus and sleeve.

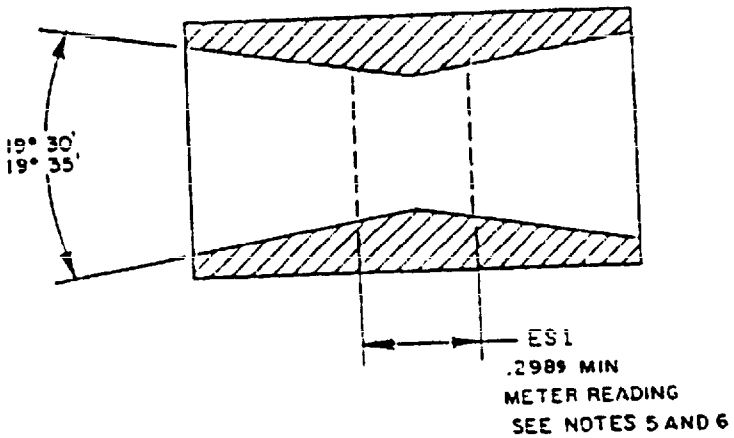

Inches	mm
.2989	7.592

NOTES:
1. Dimensions are in inches.
2. Metric equivalents are given for general information only.
3. Unless otherwise specified, tolerances are ±.002 (0.05 mm) for three place decimals, ±.03 (0.8 mm) for two place decimals and ±.1 (2.5 mm) for one place decimals. Angular tolerances are ±0° 30'.
4. Unless otherwise specified, dimensions are symmetrical about centerlines.
5. ES1 (end separation) on the biconical terminus sleeve relates to the C1 dimension established by the terminus sleeve end separation gauge standard.
6. Dimension ES1 applies after conditioning the terminus sleeve as follows:
   a. Remove the terminus sleeve from the connector and place the terminus sleeve in an oven at 150°C ±3°C for 4 to 5 hours.
   b. Dimension ES1 shall be measured 1 to 3 hours after removing the terminus sleeve from the oven and placing the sleeve at ambient room conditions of 24°C ±3°C and ambient relative humidity.

BICONICAL TERMINUS SLEEVE

FIGURE 2. Biconical terminus and sleeve - Continued.

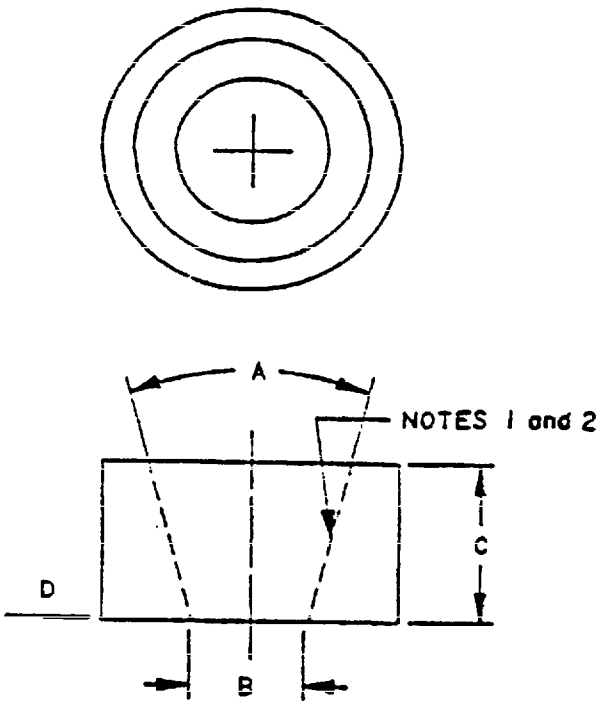

Ref	Min	Max	Units	Notes
A	19°30'	19°31'	Degrees	3
B	.434	.437	mm	
C	.523		mm	

NOTES:
1. The internal cone shall be round within 0.5 µm when measured with a commercial electronic roundness gauge.
2. The sides of the internal cone shall be straight within 0.75 µm when measured with a commercial electronic straightness gauge.
3. The 19°30' truncated cone shall be perpendicular to surface D.
4. Dimensions are in millimeters.

TERMINUS TAPER LENGTH GAUGE INSERT

FIGURE 3. Terminus and sleeve gauge standards.

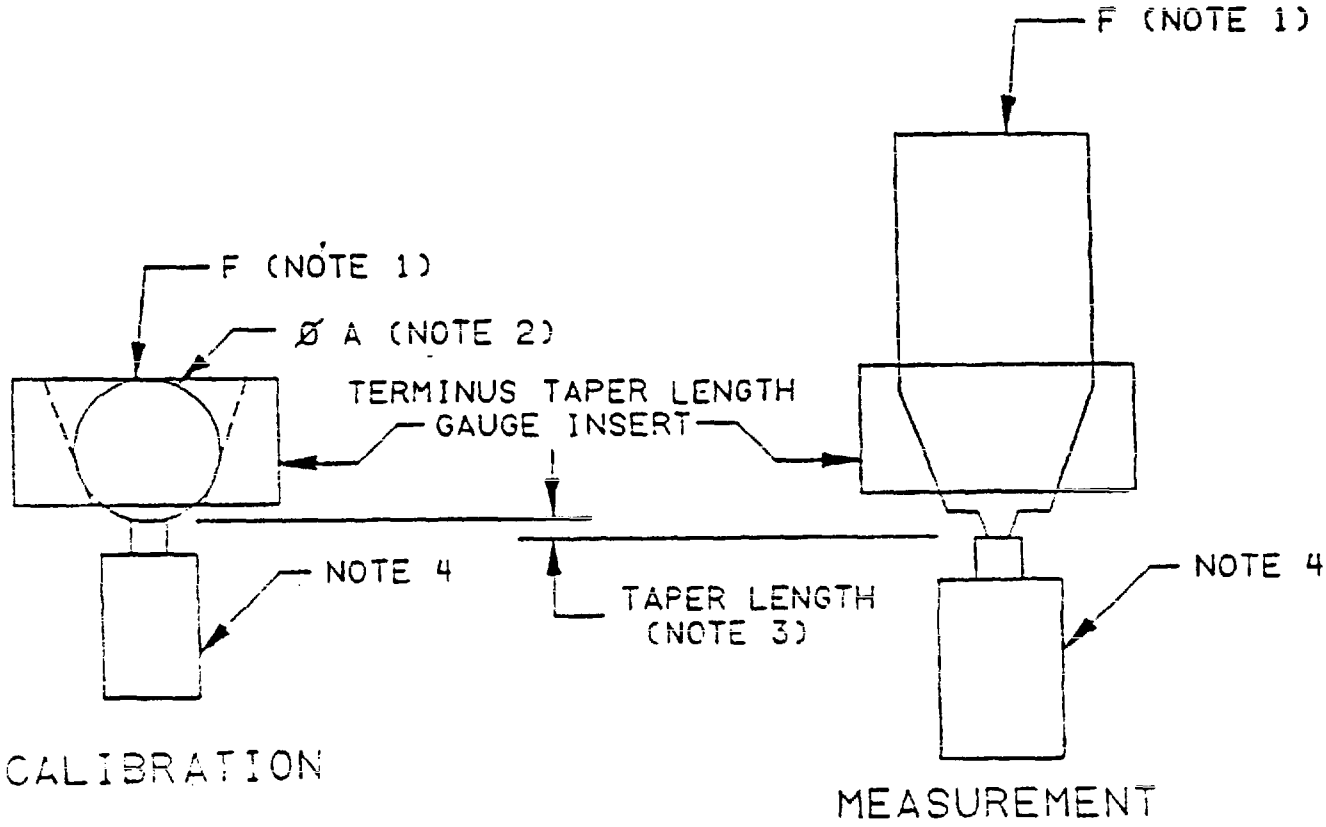

Ref	Min	Max	Units	Notes
F	17	19	Newtons	1
A	5.15595	5.15645	mm	2

NOTES:
1. Calibration and measurement shall be performed with the specified force applied to the ball or terminus along the axis of the internal taper of the gauge insert.
2. Precision steel calibration ball of specified diameter.
3. Terminus and protrusion greater than that of the calibration ball is defined as plus (+) taper length and protrusion less than that of the calibration ball is negative (-) taper length.
4. Linear position measurement system with a resolution of .25 µm or less.
5. Dimensions are in millimeters.

TERMINUS TAPER LENGTH GAUGE STANDARD

FIGURE 3. Terminus and sleeve gauge standards - Continued.

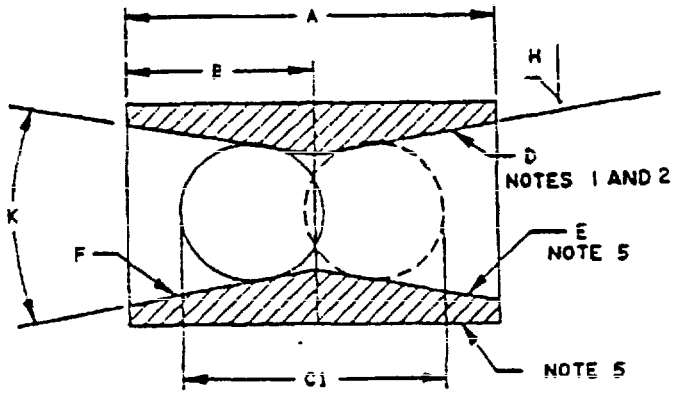

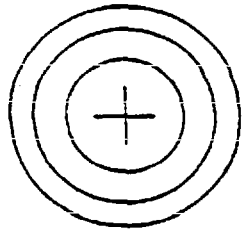

Ref	Min	Max	Units	Notes
A	12.44	12.95	mm	
B	6.22	6.48	mm	
C1	7.5170	7.5971	mm	1
D		.75	µm	2
E & F		.5	µm	3
H		.2	µm	4
K	19°31'	19°33'	degrees	

NOTES:
1. The characteristic separation of two cones in the gauge shall be measured using a nontruncated 4.76250 ±.00025 mm gauge ball inserted with a force of 300 ±5 grams. The gauge shall be inscribed with the dimension that would be read over two 4.7625 mm gauge balls if it were possible to simultaneously insert the balls into the sleeve.
2. The sides of the cones shall be straight within 0.75 µm when measured with a commercial electronic straightness gauge.
3. The internal tapers shall be true truncated cones. The sides shall be straight and the cones concentric within .5 µm when measured with a commercial electronic concentricity gauge.
4. The surface of the cone shall be smooth to within 0.2 µm rms.
5. Material shall be tool steel hardened to a Rockwell hardness of 59-62 or tungsten carbide.
6. Dimensions are in millimeters.

TERMINUS TAPER LENGTH GAUGE STANDARD

FIGURE 3. Terminus and sleeve gauge standards - Continued.

REQUIREMENTS:

Dimensions and configurations: In line connectors, see figures 1 and 2. Termini and sleeve, see figures 2 and 3. The required number of termini and sleeves shall be supplied with each connector.

Weight: 2.0 pounds maximum.

Fiber optic cable requirements: Shall be in accordance with D85045/8-B2A.

Coupling force: 3 to 10 pounds.

Coupling torque: 5 to 12 inch pounds.

Finish: The connector shall be cadmium finished, olive drab. in accordance with QQ-P-416, type II, class 3.

Materials: See table I.

TABLE I. Material description.

Parts description	Material	Finish
Bend limiter	Polyurethane estane 58202, Black BF Goodrich	None
End cap	Aluminum 6061-T6	Olive drab cadmium per QQ-P-416, type II, class 3, 500 hours extended salt spray
Connector shell	Die cast aluminum 380	Olive drab cadmium per QQ-P-416, type II, class 3, 500 hours extended salt spray
Coupling nut	Aluminum 6061-T6	Olive drab cadmium per QQ-P-416, type II, class 3, 500 hours extended salt spray
Retainer ring	Type 303 stainless steel	Passivation in accordance with QQ-P-35
Sleeve retainer	Ryton R4	None
Terminus sleeve	Moulding compound in accordance with MS63601, type 1	None

TABLE I. Material description - Continued.

Parts description	Material	Finish
Terminus	Moulding compound in accordance with MS63601, type 1	None
Terminus backbone	Aluminum 2011T3	Black anodized
Screws for sleeve retainer	Stainless steel	Passivation in accordance with QQ-P-35
C-clip	PH15-7 Mo steel in accordance with MS1632-4-25	
Washer	Stainless steel 302 in accordance with QQ-S-766	
Bellows seal	Fluorosilicone elastomer, 60 ±5 shore A durometer	Blue
Face seal washer	Neoprene durometer 70	None

Epoxy: The epoxy utilized shall be approved by the qualifying activity. Epoxy is not furnished with the connector. Minimum epoxy shelf life shall be 1 year.

Installation and removal tools: Tools are not furnished with the connector.

Threads: Applicable, except threads shall be metric in accordance with FED-STD-H28 or inch-series in accordance with FED-STD-428 and MIL-STD-1373.

Termini: Applicable, except termini shall be as specified herein.

Terminus insertion and removal methods: Terminus insertion and removal methods shall be defined in the assembly instructions.

Insertion loss: Applicable, except maximum insertion loss for 50/125 µm fiber shall be 1.5 dB. Samples shall be tested for coupling loss in accordance with EIA-455-34, method A and EIA-455-20. The initial loss measurements shall be performed in accordance with EIA-455-34. Thereafter, coupling loss changes monitored during and after other tests shall be in accordance with EIA-455-171 except that the initial launch conditions established using EIA-455-34, method A (the initial coupling loss measurements) shall not be changed. Upon the completion of each test, samples shall be examined for compliance.

Discontinuity: Not applicable.

Analog modulation: Not applicable.

Crosstalk: Applicable, except reduction shall be a minimum of 60 dB below the active channel and the length of the test cables shall be 1 to 2 meters.

Ambient optical pickup: Not applicable.

Part or Identifying Number (PIN). Example of PIN: M83526/12- (dash number from table II). Fiber optical yellow band: Not applicable.

TABLE II. PIN and dash number description.

M83526/12- dash number	Description
01	Complete connector for 50/125 µm fiber
02	Biconical terminus only for 50/125 µm fiber
03	Terminus sleeve only

Inserts marking: Not applicable.

Terminus cleaning: Not applicable.

Insert retention axial strength: Not applicable.

Insert retention radial strength: Not applicable.

Terminus retention: Not applicable.

Terminus insertion and removable forces: Not applicable.

Maintenance aging: Not applicable.

Mating durability: Applicable, except 2,000 complete cycles shall be accomplished.

Impact: Applicable, except omit standard wall pipe on test fixture and drop pad shall be 2-inch thick fir planks on top of 4-inch thick concrete slab.

Cable retention: Applicable, except load shall be maintained for one minute.

Crush resistance: Applicable, except test load shall be 450 pounds.

External bending moment: Not applicable.

Temperature life: Not applicable.

Thermal shock: Applicable, except upper temperature shall be 71°C +2, -0°C, 10 cycles.

Shock: Applicable, except test condition A shall be utilized.

Salt Spray: Applicable, except condition A of method 1001 shall be used.

Fluid immersion: Not applicable.

Ice crush/frezzing water immersion: The connectors shall be subjected to the test of DOD-STD-1078, method 4050 except immersion shall be accomplished in an open tank and the insertion loss shall be measured at each temperature after the required temperature soak.

Water pressure or freezing: Applicable, except minimum depth shall be 1.0 m for a period of not less than 24 hours. Exposure in a chamber at -20° C after immersion is not required. Bulkhead connectors shall be mounted on a 4-inch sealed cube. No ingress of water into the cube in allowed. Test shall be accomplished using 3 sets of samples: In-line connectors mated with dust caps; bulkhead connectors mated with dust caps; and, in-line connectors mated with bulkhead connectors.

Ozone exposure: Not applicable.

Mud test: A mud bath consisting of a 50/50 mixture of potter's clay and sharp sand mixed with water (10% by weight) shall be contained in a vessel to a depth of 5 inches minimum. Two in-line connectors shall be mated and the insertion loss recorded in accordance with EIA-455-20. Decouple and immerse both connectors in the mud bath for 5 minutes minimum. Remove the connectors and clean with water (immersion in the water is allowed). Connectors may be dried using cotton swabs and a lint free cloth. Disassembly of the connectors during cleaning is not allowed. Re-mate and record the received signal using EIA-455-20. The insertion loss shall not be increased by more than 0.2dB. Repeat the above test for a total of 10 items.

Fungus resistance: Samples shall be tested in accordance with method 508.1, procedure I of MIL-STD-810. Following the test, examination of the test samples shall reveal no evidence of deterioration of component parts or constitutent materials which will adversely affect performance.

Quality conformance and periodic inspection: D85045/08-B2A, or an equivalent approved by the qualifying activity, shall be used for quality conformance and periodic inspection.

Qualification inspection sample size: Applicable, except the following minimum test samples shall be provided for each connector series:

a. Six in-line connectors mated with another six in-line connectors. Larger sample sizes to allow parallel testing is allowed.

b. Six bulkhead connectors mated with six in-line connectors. Larger sample sizes to allow parallel testing is allowed.

Retention of qualification: Applicable, except the contractor shall foward a report of 24-month intervals.

Quality conformance inspection sample unit preparation: Applicable, except in cases where no MIL-C-85045 qualified sources exist, cable shall be specified by the qualifying activity.

Periodic inspection sampling plan: Applicable, except sample units shall be selected every 24 months.

Qualification inspection shall consist of performing the inspections and optical tests specified in table III herein, in the sequence shown.

Group A inspection shall consist of performing the inspections and optical tests specified in table IV herein, in the sequence shown.

Group B inspection shall consist of performing the inspections and optical tests specified in table V herein, in the sequence shown.

Group C inspection shall consist of performing the inspections and optical tests specified in table VI herein, in the sequence shown.

Group C sampling plan: Sample units which have passed group B inspection shall be selected in accordance with table VI.

NOTES:

1. This in-line connector mates with itself, MIL-C-83526/13 bulkhead connector, MIL-C-83426/14 test plug, and MIL-C-83526/15 dust cover.

2. Connector accessories: Each connector shall be supplied with one set of assembly instructions and one plastic protective cover.

TABLE III. Qualification inspection.

Inspection MIL-C-83526	Optical test
	Insertion loss
Group I (All sample units)1/	
Physical conformance	
Size	
Weight	
Color	
Identification marking	
Workmanship	
Optical conformance	
Insertion loss	x 2/
Crosstalk	
Group II (3 sample units)	
Thermal shock	d
Mud	d
Group III (3 sample units)	
Humidity	a
Mechanical shock	a
Vibration	a
Cable pull-out force	d
Twist	d
Cable seal flexing	d
Mating durability	a
Connector engagement and disengagement forces	
Coupling torques	
Water pressure/freezing	d
Ice crush/freezing water immersion	d
Group IV (3 sample units)	
Impact	a
Crush resistance	d
Salt spray	a
Sand and dust	a
Fungus	
Flammability	

1/ Sample units - Number indicatied means that the number of connectors, backshell or accessories that shall be tested.

2/ a - Indicates performance test to be accomplished before and after inspection test.

d - Indicates performance test to be accomplished before, during and after inspection test.

x - Indicates that this test applies.

TABLE IV. Group A inspection.

Inspection MIL-C-83526	Optical test
	Insertion loss
Color	-
Workmanship	-
Insertion loss	X 1/ 2/
Identification marking	-

1/ X - Indicates that this test applies.
2/ Inspection level S-4 shall be utilized for insertion loss.

TABLE V. Group B inspection.

Inspection MIL-C-83526
Connector engagement and disengagement forces
Coupling forces

TABLE VI. Group C inspection.

Inspection	Optical Insetion loss test 1 / 2/	Sample quantity
Subgroup 1 (3 month interval)		
Crosstalk	-	4 units
Thermal shock	d	4 units
Twist	d	4 units
Cable seal flexing	d	4 units
Cable pull-out force	d	4 units
Subgroup 2 (6 month interval)		
Mechanical shock	a	2 units
Vibration	a	2 units
Crush resistance	d	2 units
Impact	a	2 units
Humidity	d	2 units
Mating durability	a	2 units
Subgroup 3 (12 month interval)		
Ice crush/freezing water immersion	d	2 units
Flammability	-	2 units
Salt spray	a	2 units
Sand and dust	a	2 units
Mud	d	2 units
Water pressure/freezing	d	2 units
Fungus	-	2 units
Size	-	2 units
Weight	-	2 units

1/ a - indicates performance test to be accomplished before and after inspection test.

2/ d - indicates performance test to be accomplished before, during and after inspection test.

CONCLUDING MATERIAL

Preparing activity:
Army - CR

Agent:
DLA - ES

(Project 6060-A022-1)