MILITARY SPECIFICATION SHEET

DUMMY LOADS, ELECTRICAL, WAVEGUIDE
(FREQUENCY RANGE 1.12 TO 1.70 GIGAHERTZ)

This specification is approved for use by all Departments and Agencies of the Department of Defense.

The complete requirements for procuring the dummy loads described herein shall consist of this document and the latest issue of Specification MIL-D-3954.

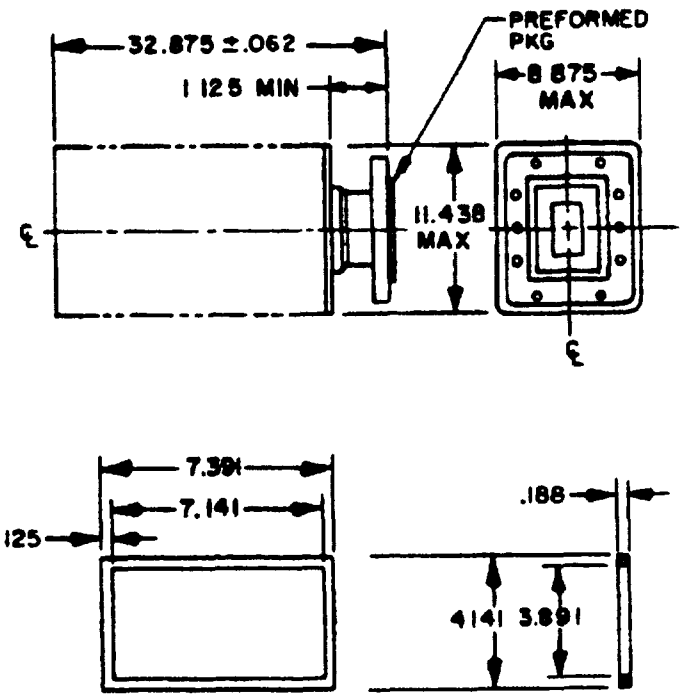

INCHES	MM
.062	1.57
.125	3.18
.188	4.78
1.125	25.58
3.891	98.83
4.141	105.18
7.141	181.38
7.391	187.73
8.875	225.50
11.438	290.53
32.875	835.03

NOTES:
1. Dimensions are in inches.
2. Unless otherwise specified, tolerance is ±.005 (.13 mm).
3. Metric equivalents (to the nearest .01 mm) are given for general information only and are based upon 1 inch = 25.4 mm.
4. Screws and lockwashers are supplied with mating flange.
5. Quantity of fins required will be dependent on heat level requirement of the load.

Ⓐ FIGURE 1. Class I dummy load.

Ⓐ denotes changes.

FSC 5985

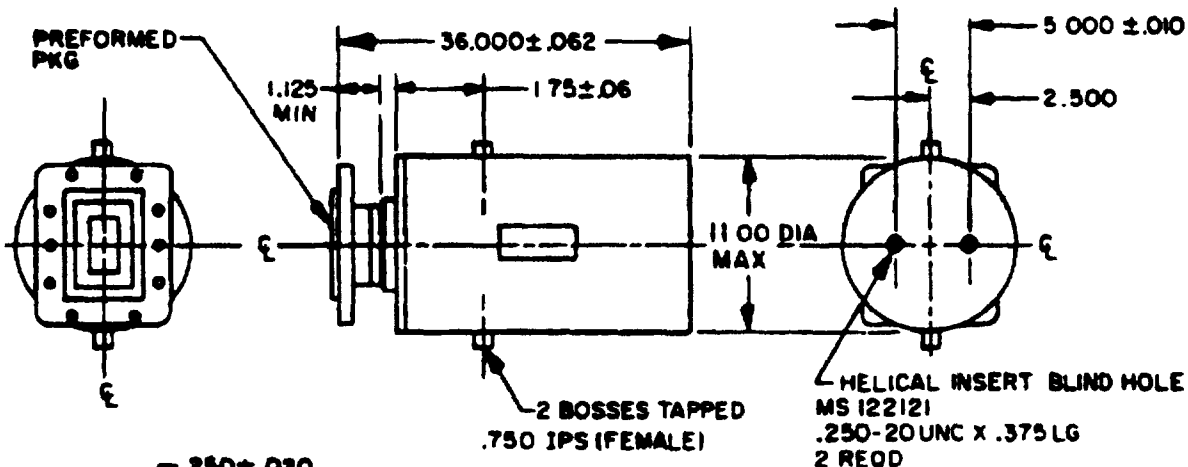

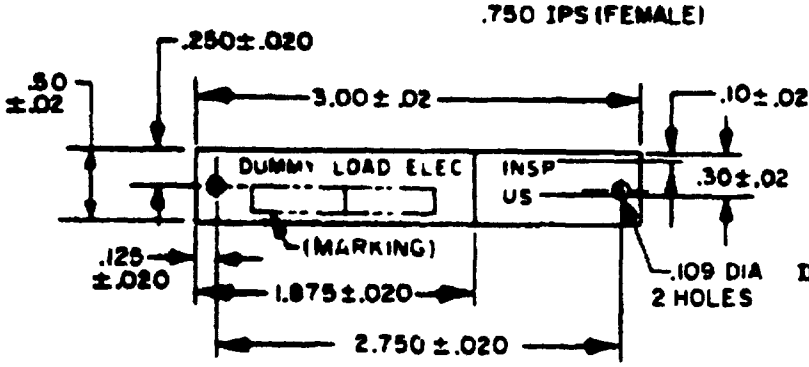

IDENTIFICATION PLATE

INCHES	MM	INCHES	MM
.010	.25	.500	12.70
.02	.51	.750	19.05
.06	1.52	1.125	28.58
.062	1.57	1.75	44.45
.100	2.54	1.875	47.63
.109	2.77	2.500	63.50
.125	3.18	2.750	69.85
.250	6.35	3.00	76.2
.300	7.62	5.000	127.0
.375	9.38	11.00	279.4
		36.000	914.40

NOTES:
1. Dimensions are in inches.
2. Unless otherwise specified, tolerance is ±.005 (.13 mm).
3. Metric equivalents (to the nearest .01 mm) are given for general information only and are based upon 1 inch = 25.4 mm.
4. Screws and lockwashers are supplied with mating flange.

Ⓐ FIGURE 2. Class II dummy load.

TABLE I. Characteristics.

Part number	Class Ⓐ	Material	Flange equal to Ⓐ	VSWR max	Power		Pressure		Figure	Flow rate	Input temp.	Output temp.
					Average	Peak	Internal	Coolant chamber				
					(watts)	(kilowatts)	(psig)	(psig)		(GPM 1/)	(°C)	(°C)
M3954/15-01	I	AL	M3922/58-008 (UG-418B/U)	1.10	2,200 2/	2,200	23		1			
M3954/15-02	II	AL	M3922/58-008 (UG-418B/U)	1.10	15,000	17,200	30	150	2	5	35	60
M3954/15-03	II	Copper	M3922/58-007 (UG-417B/U)	1.10	15,000	17,200	30	150	2	5	35	60
M3954/15-04	II	Corrosion resisting steel	M3922/58-007 (UG-417B/U)	1.10	15,000	17,200	30	150	2	5	35	60

1/ The flow rate was determined from the following formula:

$$Q = \frac{6.8P}{Cp\ \Delta T}$$

Where: Q = Minimum flow rate in GPM.
P = Avg power in kilowatts.
Cp = Specific heat of coolant.
ΔT = Coolant temperature rise in °F.

The calculations were made for Cp = 1 for water, a ΔT of 45°F and a safety factor of approximately 2. For different coolants or different temperature rises, a different flow rate would be necessary

2/ This is a test power value. The average rated power is 8,000 watts.

Ⓐ TABLE II. Cross reference of part number/ AN nomenclature.

Part number	AN nomenclature
M3954/15-01	DA-147/U

REQUIREMENTS:

Design and construction:
Dimensions and configuration: See figures 1 and 2.
Weight.
Dry load - 113 lbs max.
Liquid cooled loads - 270 lbs max.

Performance characteristics: See table I.

Part number: M3954/15- (dash number from table I).

Custodians:
Army - EL
Navy - EC
Air Force - 85

Review activities:
Army - MI, MU
Navy -
Air Force - 11, 17, 80
DSA - ES

User activities:
Army -
Navy - CG, MC, AS, OS, SH
Air Force - 14, 19

Preparing activity.
Navy - EC

Agent:
DSA - ES

(Project 5985-0754-S)

FOLD

DEPARTMENT OF THE NAVY
NAVAL ELECTRONIC SYSTEMS COMMAND
WASHINGTON, D. C. 20360

POSTAGE AND FEES PAID
NAVY DEPARTMENT
DOD 316

OFFICIAL BUSINESS

COMMANDER
NAVAL ELECTRONIC SYSTEMS COMMAND
DEFENSE STANDARDIZATION PROGRAM BRANCH
DEPARTMENT OF THE NAVY
WASHINGTON, D. C. 20360

FOLD

STANDARDIZATION DOCUMENT IMPROVEMENT PROPOSAL

OMB Approval No. 22-R255

INSTRUCTIONS The purpose of this form is to solicit beneficial comments which will help achieve procurement of suitable products at reasonable cost and minimum delay, or will otherwise enhance use of the document. DoD contractors, government activities, or manufacturers/vendors who are prospective suppliers of the product are invited to submit comments to the government. Fold on lines on reverse side, staple in corner, and send to preparing activity. Comments submitted on this form do not constitute or imply authorization to waive any portion of the referenced document(s) or to amend contractual requirements. Attach any pertinent data which may be of use in improving this document. If there are additional papers, attach to form and place both in an envelope addressed to preparing activity.

DOCUMENT IDENTIFIER AND TITLE

NAME OF ORGANIZATION AND ADDRESS

CONTRACT NUMBER

MATERIAL PROCURED UNDER A

☐ DIRECT GOVERNMENT CONTRACT ☐ SUBCONTRACT

1. HAS ANY PART OF THE DOCUMENT CREATED PROBLEMS OR REQUIRED INTERPRETATION IN PROCUREMENT USE?
   A. GIVE PARAGRAPH NUMBER AND WORDING

   B. RECOMMENDATIONS FOR CORRECTING THE DEFICIENCIES

2. COMMENTS ON ANY DOCUMENT REQUIREMENT CONSIDERED TOO RIGID

3. IS THE DOCUMENT RESTRICTIVE?

   ☐ YES ☐ NO *(If "Yes", in what way?)*

4. REMARKS

SUBMITTED BY *(Printed or typed name and address - Optional)*

TELEPHONE NO

DATE

DD FORM 1 JAN 72 1426 REPLACES EDITION OF 1 JAN 68 WHICH MAY BE USED S/N 0102-014-1802