MIL-D-3954/19A
29 May 1974
SUPERSEDING
MIL-D-3954/19
14 October 1966, and
MS35885
15 May 1962

MILITARY SPECIFICATION SHEET

DUMMY LOADS, ELECTRICAL, WAVEGUIDE (FREQUENCY RANGE 8.2 TO 12 4 GIGAHERTZ)

This specification is approved for use by all Departments and Agencies of the Department of Defense.

The complete requirements for procuring the dummy loads described herein shall consist of this document and the latest issue of Specification MIL-D-3954

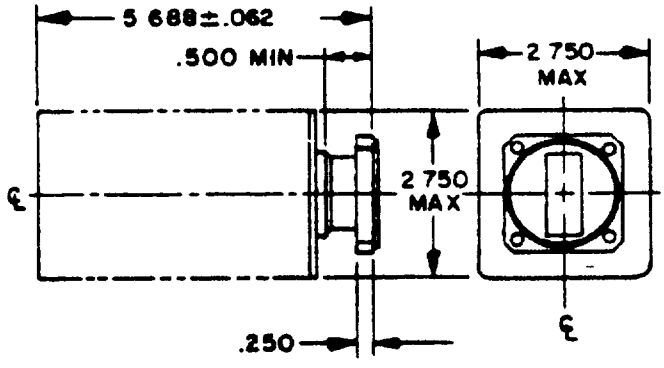

INCHES	MM
.062	1.57
.250	6.35
.500	12.70
2.750	69.85
5.688	144.48

NOTES:
1. Dimensions are in inches.
2. Unless otherwise specified, tolerance is ±.005 (.13 mm).
3. Metric equivalents (to the nearest .01 mm) are given for general information only and are based upon 1 inch = 25.4 mm.
4. Screws, lockwashers and gasket are supplied with mating flange.
5. Quantity of fins required will be dependent on heat level requirement of the load.

(A) FIGURE 1. Class I dummy load.

(A) denotes changes.

FSC 5985

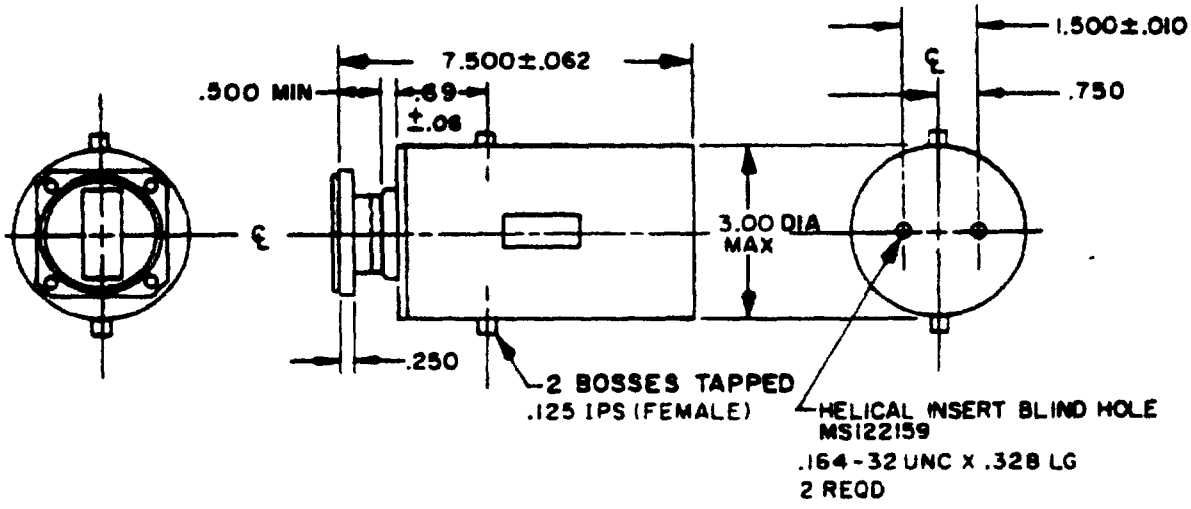

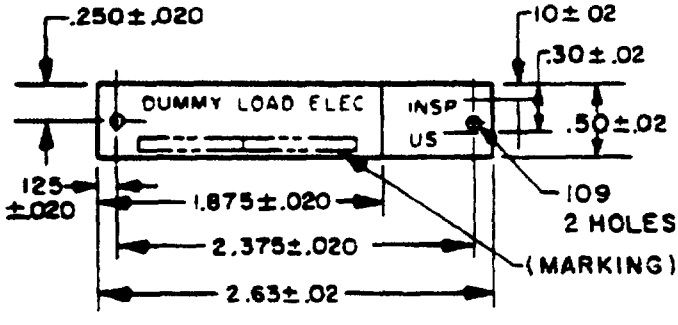

IDENTIFICATION PLATE

INCHES	MM
.010	.25
.02	.51
.06	1.52
.062	1.57
.100	2.54
.109	2.77
.125	3.18
.164	4.17
.250	6.35
.300	7.62
.328	8.33
.500	12.70
.69	17.53
1.50	38.14
1.875	47.63
2.375	60.33
2.63	66.80
3.00	76.20
7.500	189.50

NOTES:
1. Dimensions are in inches.
2. Unless otherwise specified, tolerance is ±.005 (.13 mm).
3. Metric equivalents (to the nearest .01 mm) are given for general information only and are based upon 1 inch = 25.4 mm.
4. Screws, lockwashers and gasket are supplied with mating flange.

A FIGURE 2. Class II dummy load.

TABLE I. Characteristics.

Part number	Class Ⓐ	Material	Flange equal to Ⓐ 2/	VSWR max	Power		Pressure		Figure	Flow rate	Input temp.	Output temp.
					Average	Peak	Internal	Coolant chamber				
					(watts)	(kilowatts)	(psig)	(psig)		(GPM 1/)	(°C)	(°C)
M3954/19-01	I	AL	M3922/53-003 (UG-135/U)	1.10	400 3/	290	30	-	1			
M3954/19-02	II	Copper	M3922/53-001 (UG-39/U)	1.10	400	290	30	100	2			
M3954/19-03	II	AL	M3922/53-003 (UG-135/U)	1 10	1000	290	30	100	2	0.30	35	60
M3954/19-04	II	Copper	M3922/53-001 (UG-39/U)	1.10	1000	290	30	100	2	0.30	35	60
M3954/19-05	II	Corrosion resisting steel	M3922/53-001 (UG-39/U)	1.10	1000	290	30	100	2	0.30	35	60

1/ The flow rate was determined from the following formula:

$$Q = \frac{6.8P}{Cp\ \Delta T}$$

Where: Q = Minimum flow rate in GPM.
P = Avg power in kilowatts
Cp = Specific heat of coolant.
ΔT = Coolant temperature rise in °F.

The calculations were made for Cp = 1 for water, a ΔT of 45°F and a safety factor of approximately 2. For different coolants or different temperature rises, a different flow rate would be necessary

2/ Except thickness.

3/ This is a test power value. The average rated power is 500 watts.

(A) TABLE II. Cross reference part number/ AN nomenclature.

Part number	AN nomenclature
M3954/19-01	DA-146/U

REQUIREMENTS.

Design and construction:
Dimensions and configuration See figures 1 and 2
Weight.
Dry load - 1.6 lbs max.
Liquid cooled load - 29 lbs max.

Performance characteristics. See table I

Part number: M3954/19- (dash number from table I).

Custodians.
Army - EL
Navy - EC
Air Force - 85

Review activities.
Army - MI, MU
Navy -
Air Force - 11, 17, 80
DSA - ES

User activities
Army -
Navy - CG, MC, AS, OS, SH
Air Force - 14, 19

Preparing activity:
Navy - EC

Agent.
DSA - ES

(Project 5985-0754-9)

☆U.S. GOVERNMENT PRINTING OFFICE 1974-713-186/6785

INSTRUCTIONS: In a continuing effort to make our standardization documents better, the DoD provides this form for use in submitting comments and suggestions for improvements. All users of military standardization documents are invited to provide suggestions. This form may be detached, folded along the lines indicated, taped along the loose edge *(DO NOT STAPLE)*, and mailed. In block 5, be as specific as possible about particular problem areas such as wording which required interpretation, was too rigid, restrictive, loose, ambiguous, or was incompatible, and give proposed wording changes which would alleviate the problems. Enter in block 6 any remarks not related to a specific paragraph of the document. If block 7 is filled out, an acknowledgement will be mailed to you within 30 days to let you know that your comments were received and are being considered.

NOTE. This form may not be used to request copies of documents, nor to request waivers, deviations, or clarification of specification requirements on current contracts. Comments submitted on this form do not constitute or imply authorization to waive any portion of the referenced document*(s)* or to amend contractual requirements.

(Fold along this line)

(Fold along this line)

DEPARTMENT OF THE NAVY

NO POSTAGE NECESSARY IF MAILED IN THE UNITED STATES

OFFICIAL BUSINESS
PENALTY FOR PRIVATE USE $300

BUSINESS REPLY MAIL
FIRST CLASS PERMIT NO. 12503 WASHINGTON D C

POSTAGE WILL BE PAID BY THE DEPARTMENT OF THE NAVY

Chief of Naval Material
ATTN: MAT 0434
Washington, DC 20360

(TO DETACH THIS FORM, CUT ALONG THIS LINE)

STANDARDIZATION DOCUMENT IMPROVEMENT PROPOSAL

(See Instructions – Reverse Side)

1. DOCUMENT NUMBER

2. DOCUMENT TITLE

3a. NAME OF SUBMITTING ORGANIZATION

4. TYPE OF ORGANIZATION *(Mark one)*

- ☐ VENDOR
- ☐ USER
- ☐ MANUFACTURER
- ☐ OTHER *(Specify)*. _____

b. ADDRESS *(Street, City, State, ZIP Code)*

5. PROBLEM AREAS

a. Paragraph Number and Wording

b. Recommended Wording

c. Reason/Rationale for Recommendation

6. REMARKS

7a. NAME OF SUBMITTER *(Last, First, MI)* – Optional

b. WORK TELEPHONE NUMBER *(Include Area Code)* – Optional

c. MAILING ADDRESS *(Street, City, State, ZIP Code)* – Optional

8. DATE OF SUBMISSION *(YYMMDD)*

DD FORM 1426, 82 MAR

PREVIOUS EDITION IS OBSOLETE.