FED. SUP CLASS
5930

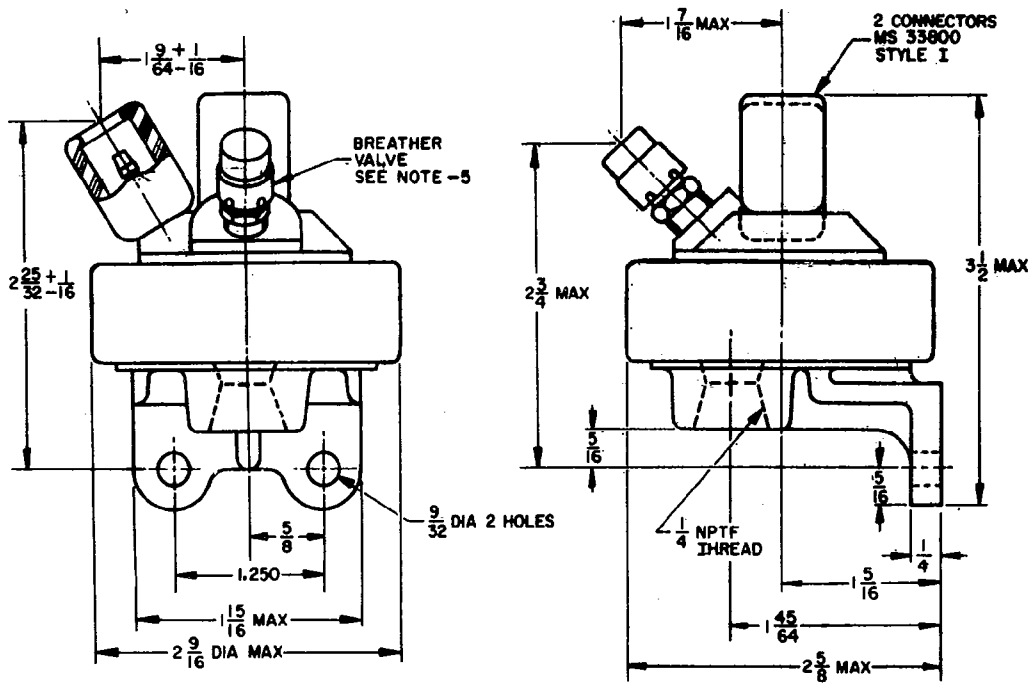

NOTES:

1. TYPE II (SUFFICIENTLY HIGH PRESSURE CLOSES CONTACTS) GRADE A (WATERPROOF) OF PROCUREMENT SPECIFICATION.
2. SWITCH CONTACTS SHALL CLOSE FROM 2 TO 5 PSI (ACTUATING PRESSURE) AND REMAIN CLOSED WITH INCREASING PRESSURE.
3. SWITCH SHALL WITHSTAND OVERLOAD PRESSURE OF 150 PSI.
4. (A) SWITCH CONTACT RATING AT 24 VOLTS DC: RESISTIVE LOAD 3 AMPS.
5. ALTERNATE INTERNAL BREATHER VALVE (BALL CHECK TYPE) MAY BE USED WITHIN THE CONFINES OF THE SWITCH DIMENSIONS.
6. UNLESS OTHERWISE SPECIFIED, DIMENSIONS ARE IN INCHES, TOLERANCES ARE ± 1/32 ON FRACTIONS, ± .005 ON DECIMALS.
7. FOR DESIGN FEATURE PURPOSES, THIS STANDARD TAKES PRECEDENCE OVER PROCUREMENT DOCUMENT REFERENCED HEREIN.
8. REFERENCED DOCUMENTS SHALL BE OF THE ISSUE IN EFFECT ON DATE OF INVITATION FOR BID.
9. THIS STANDARD IS NOT INTENDED TO LIMIT CONSTRUCTION TO FEATURES OTHER THAN AS SHOWN BY DIMENSIONS, NOTATIONS OR REFERENCED DOCUMENTS.

APPROVED 27 FEB. 1964 REVISED (A) 26 JUNE 1970

MS PART NO.	FORMER PART NO.
MS 75062 -1	ORD 7064400

P.A. AT
Other Cust

TITLE: SWITCH, PRESSURE-STOPLIGHT, VEHICULAR, AIR BRAKE SYSTEM, 24 VOLT, WATERPROOF

MILITARY STANDARD

MS 75062 (AT)

PROCUREMENT SPECIFICATION: MIL-S-12211

SUPERSEDES

SHEET 1 OF 1

DD FORM 1 APR 57 672-1 (Limited coordination)

PREVIOUS EDITIONS OF THIS FORM ARE OBSOLETE

This standard has been authorized by the Army and is mandatory for use by the Army. All other military activities are required to employ this standard where suitable.