FSC SUP CLASS
5930

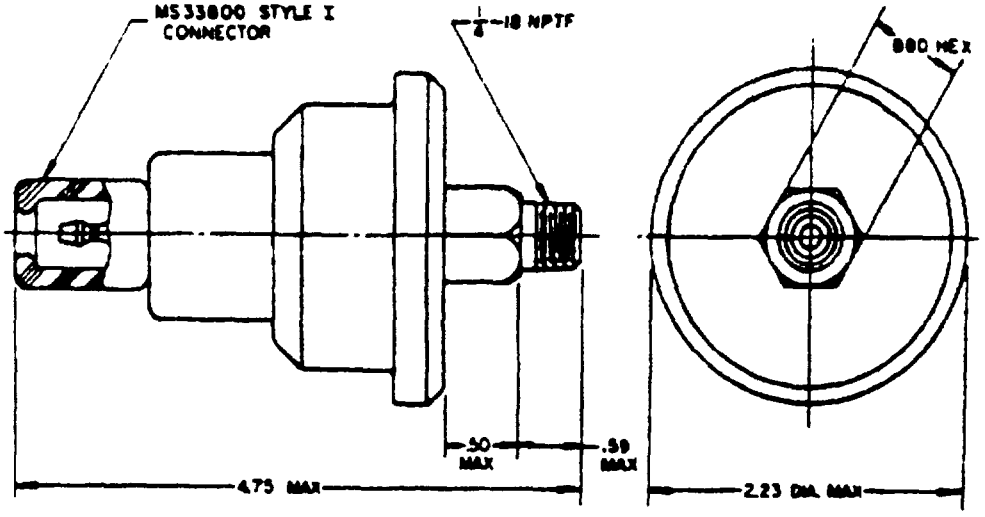

MS PART NO.	ACTUATING PRESSURE	FORMER PART NO	TYPE	OVERLOAD PRESSURE PSI
MS 90530 -1	4-8 PSI	NONE	I	80
MS 90530 -2	9-13 PSI	8376927		80
MS 90530 -3	15-19 PSI	8380688		80
MS 90530 -4	23-27 PSI	NONE		80
MS 90530 -5	28-32 PSI	8376925		100
MS 90530 -6	44-50 PSI	8675767		100
MS 90530 -7	60-65 PSI	NONE		100
MS90530-8	4-8 PSI	NONE	II	
MS90530-9	9-13 PSI	10914602		
MS90530-10	15-19 PSI	NONE		
MS90530-11	23-27 PSI	NONE		
MS90530-12	28-32 PSI	NONE		
MS90530-13	44-50 PSI	NONE		
MS 90530-14	60-65 PSI	NONE		

NOTE

1. TYPE I SUFFICIENTLY LOW PRESSURE CLOSES CONTACTS
   TYPE II SUFFICIENTLY HIGH PRESSURE CLOSES CONTACTS
2. UNLESS OTHERWISE SPECIFIED, DIMENSIONS ARE IN INCHES, TOLERANCES ARE ± .015 ON DECIMALS
3. FOR DESIGN FEATURE PURPOSES, THIS STANDARD TAKES PRECEDENCE OVER PROCUREMENT DOCUMENTS REFERENCED HEREIN
4. REFERENCED DOCUMENTS SHALL BE IN EFFECT ON DATE OF INVITATION FOR BID
5. THIS STANDARD IS NOT INTENDED TO LIMIT CONSTRUCTION TO FEATURES OTHER THAN AS SHOWN HEREON BY DIMENSIONS NOTATIONS AND REFERENCED DOCUMENTS

(c) ENTIRE STANDARD REVISED

APPROVED 12 SEPTEMBER 1962 REVISED (A) 25 MAY 1964 (B) 20 MAY 1966 (C) 26 SEPTEMBER 1967 (D) 19 FEB 1976 (E) 2 FEBRUARY 1980

USER ACTIVITIES ARMY-AT

REVIEWER ACTIVITIES DLA-ES

(c)

This military standard is approved for use by all Departments and Agencies of the Department of Defense. Selection for all new engineering and design applications and for repetitive use shall be made from this document when applicable.

DISTRIBUTION STATEMENT A. Approved for public release; distribution is unlimited

P A ARMY-AT Other Cust	INTERNATIONAL INTEREST	TITLE SWITCH, PRESSURE-WARNING, SPST, WATERPROOF, 24 VOLT, DC	MILITARY STANDARD MS90530
PROCUREMENT SPECIFICATION MIL-S-122	SUPERSEDES		SHEET OF

DD FORM 672-1 COORDINATED

593-4845