MILITARY SPECIFICATION SHEET

SOCKETS AND ACCESSORIES FOR PLUG-IN ELECTRONIC COMPONENTS (VIBRATOR, TOP OR BOTTOM MOUNTING, SADDLE TYPE, 7 CONTACT, RADIAL)

The complete requirements for procuring the sockets and accessories described herein shall consist of this document and the latest issue of Specification MIL-S-12883.

This specification is mandatory for use by all Departments and Agencies of the Department of Defense.

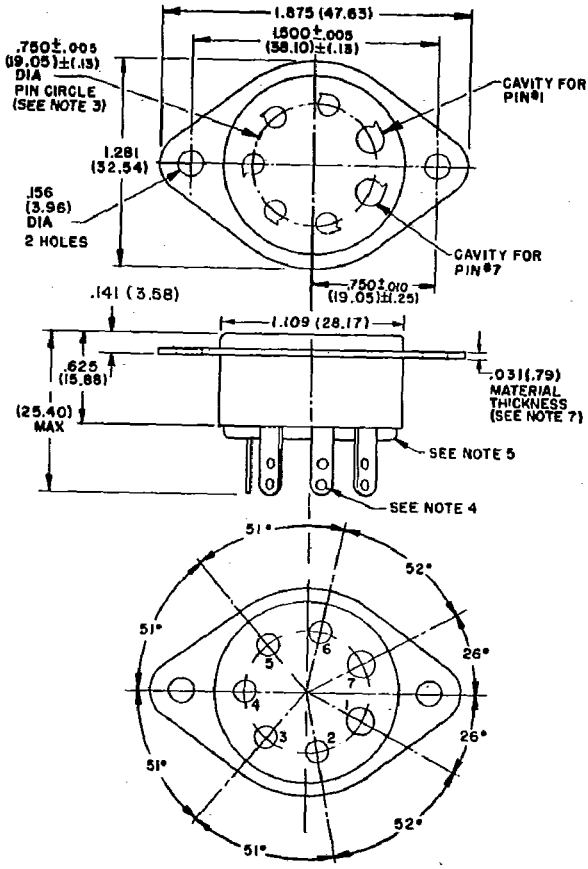

NOTES:

1. All dimensions in inches. Metric equivalents (to the nearest .01 mm) are given for general information only and are based upon 1 inch = 25.4 mm.
2. Unless otherwise specified, tolerances are .xxx±.016 (.41 mm) and ±1/2° on angles.
3. Seven contact cavities oriented as indicated, and each cavity located within 1/2° of true position, shall be established along the pin circle.
4. Each contact tab shall have either 2 wire holes of .065 (1.65 mm) minimum diameter, or 1 slot of .125 (3.18 mm) minimum length and .065 (1.65 mm) minimum width. The holes, or slot, shall lie on the longitudinal centerline of the contact tab within ±.008 (.20 mm).
5. Barriers and their shapes are optional. When present, barriers shall have a maximum height of .062 (1.57 mm).
6. Marking shall be on top surface of insulator.
7. Material thickness of mounting flange shall be measured in an area where burring or dishing of the mounting hole is not present.
8. Millimeters are in parentheses.

FIGURE 1. Socket configuration.

REQUIREMENTS:

Dimensions, configuration, and descriptive information: See figure 1 and table I.

Contact cavities: One shape only. D-shaped or circular, at the option of the supplier.

Saddle material: Corrosion-resisting steel in accordance with QQ-S-763, or brass. When stainless steel is used, no other metal finish is required.

Saddle: The method of attaching the saddle to the insulator body, and the shape of the saddle where attachment is effected, are optional. The saddle attachment shall be such as to enable the socket to be mounted with equal effectiveness in top-of-chassis or bottom-of-chassis position.

Insertion and withdrawal force:
Initial insertion force: 8 pounds minimum.
Initial withdrawal force: 20 pounds maximum.

Insulation resistance: 1,000 megohms minimum.
(Test-pin diameters: 0.156 ±0.001 inch, and 0.125 ±0.001 inch for the larger and smaller contacts, respectively.

Dielectric withstanding voltage:
Sea level:
Test voltage: 3,500 volts root mean square (rms).
(Test-pin diameters: 0.156 ±0.001 inch and 0.125 ±0.001 inch for the larger and smaller contacts, respectively.)
High altitude:
Test voltage: 1,000 volts rms.
(Test-pin diameters: 0.156 ±0.001 inch and 0.125 ±0.001 inch for the larger and smaller contacts, respectively.)

Contact resistance:
Average for all contacts: 0.015 ohm maximum.
Individual contacts: 0.03 ohm maximum.

Vibration: The test-gage shall be an approved vibrator type VB024S01 (or equivalent), in accordance with MIL-V-95.

Shock: The test-gage shall be an approved vibrator type VB024S01 (or equivalent), in accordance with MIL-V-95.

Continuity test circuit: With the test gage inserted into the socket(s) under test, the pins of the test gage(s) and the contacts of the socket(s) under test shall result in a series circuit. The test gage shall be vibrator type VB024S01 in accordance with MIL-V-95.

Durability: After the durability test, the withdrawal force shall be 5 pounds minimum.

Static load: 80 pounds.

TABLE I. Dash numbers, military part numbers, and descriptive information.

Dash number	Military part number	Insulating material	Old type designator and replacement data 1/
01	M12883/05-01	SDG-F or GDI-30F	TS0707P01 (1-way)
02	M12883/05-02	MIL-M-14, type MFE	TS0707P01 (2-way)

1/ 1-way replacement: The new item (designated by military part number) will replace the old item (formerly designated by type designator); however, the old item will not replace the new item.
2-way replacement: The two items are interchangeable; i.e., the new item will replace the old item, and the old item will replace the new item.

TABLE II. Test-gage details.

Inspection	A (pin length)	E (pin dia)	M_1 (test-end dia)	F (pin dia)	M_2 (test-end dia)	C (pin-circle dia)	N_1 (probe-end dia)	N_2 (probe-end dia)	D (gage dia)	No. of pins	Total weight of gage (±5%)
	Inch	Inch	Inch	Inch	Inch	Inch	Inch	Inch	Inch		Ounces
Insertion and withdrawal force - - - - -	0.591 ±0.005	0.1535 ±0.0001	---	0.1225 ±0.0001	---	0.7500 basic	---	---	1.125 ±0.005	7 (2:E 5:F)	---
Contact resistance - -	0.591 ±0.005	0.1535 ±0.0001	---	0.1225 ±0.0001	---	0.7500 basic	---	---	1.173 ±0.006	7 (2:E 5:F)	---
Contact retention 1/ - -	0.591 ±0.005	---	0.1535 ±0.0001	---	0.1225 ±0.0001	---	0.1585 ±0.0001	0.1275 ±0.0001	---	---	2 2/
Durability - - -	0.591 ±0.005	0.1585 ±0.0001	---	0.1275 ±0.0001	---	0.7500 basic	---	---	1.125 ±0.005	7 (2:E 5:F)	---

1/ Two gages, one having M_1 and N_1 pins, and the other having M_2 and N_2 pins, shall be used for the larger and smaller contacts, respectively.

2/ Weight of the individual gage.

Test-gage details: See table II and MIL-S-12883.

Mating-base dimensions: Sockets shall accommodate plug-in components having mating-base dimensions as shown on figure 2.

OPERATING INFORMATION:

Ratings (absolute maximum):
Voltage:
Sea level: 1, 250 volts rms.
50, 000 feet: 850 volts rms.
Current: 5 amperes.
Operating temperature: 100°C.

Part number: Consists of the basic number of this specification sheet and a dash number faken from table I.
Example:

M12883/05-01

Basic document number

Dash number from table I

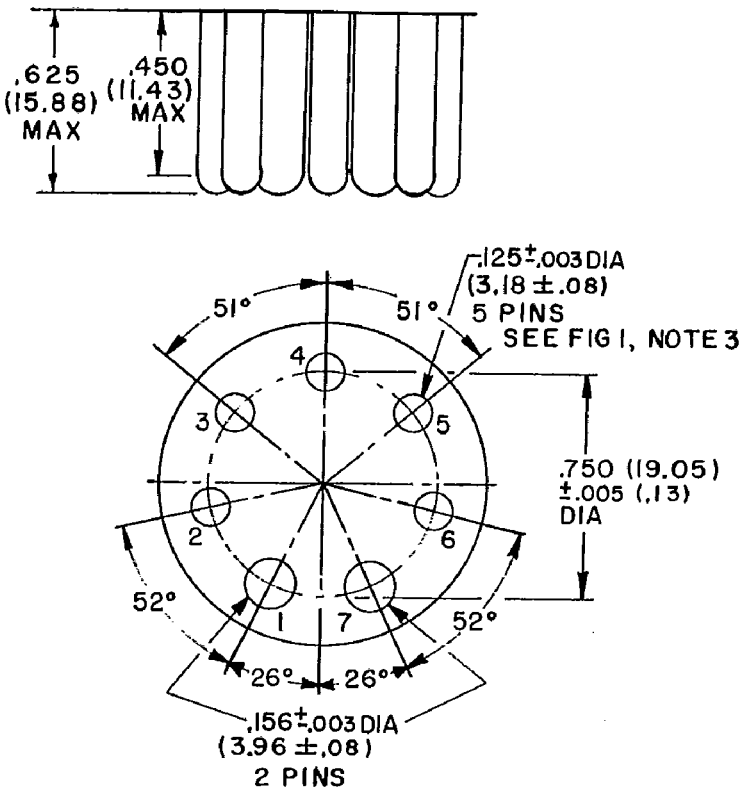

NOTES:
1. All dimensions in inches.
2. Metric equivalents (to the nearest .01 mm) are given for general information only and are based upon 1 inch = 25.4 mm.
3. Millimeters are in parentheses.

FIGURE 2. Mating-base dimensions.

Custodians:
Army - EL
Navy - SH
Air Force - 11

Review activities:
Army - MI, MU, EL, ME, AT, AV
Navy - SH
Air Force - 11, 17, 85
DSA - ES

User activities:
Army - None
Navy - MC, AS, OS, CG
Air Force - 19

Preparing activity:
Army - EL

(Project 5935-1357-5)