INCH-POUND

MIL-DTL-15370/9F
18 June 2003
SUPERSEDING
MIL-C-15370/9E
22 September 1989

DETAIL SPECIFICATION SHEET

COUPLERS, DIRECTIONAL (COAXIAL, SMA CONNECTORS) (1 TO 26.5 GHz)

This specification is approved for use by all Departments and Agencies of the Department of Defense.

The requirements for acquiring the couplers described herein shall consist of this specification sheet and MIL-DTL-15370.

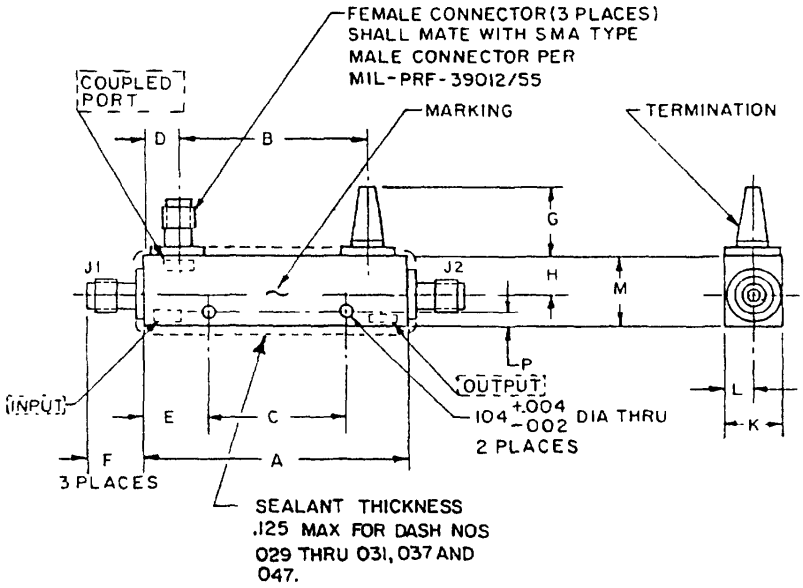

Inches	mm
.002	0.05
.004	0.10
.104	2.64

NOTES:
1. Dimensions are in inches.
2. Metric equivalents are given for information only.

FIGURE 1. Dimensions and configuration for part number M15370/9-001 through M15370/9-008, M15370/9-029 through M15370/9-031, M15370/9-035 through M15370/9-038, M15370/9-042 and M15370/9-047 through M15370/9-049.

DISTRIBUTION STATEMENT A. Approved for public release; distribution is unlimited.

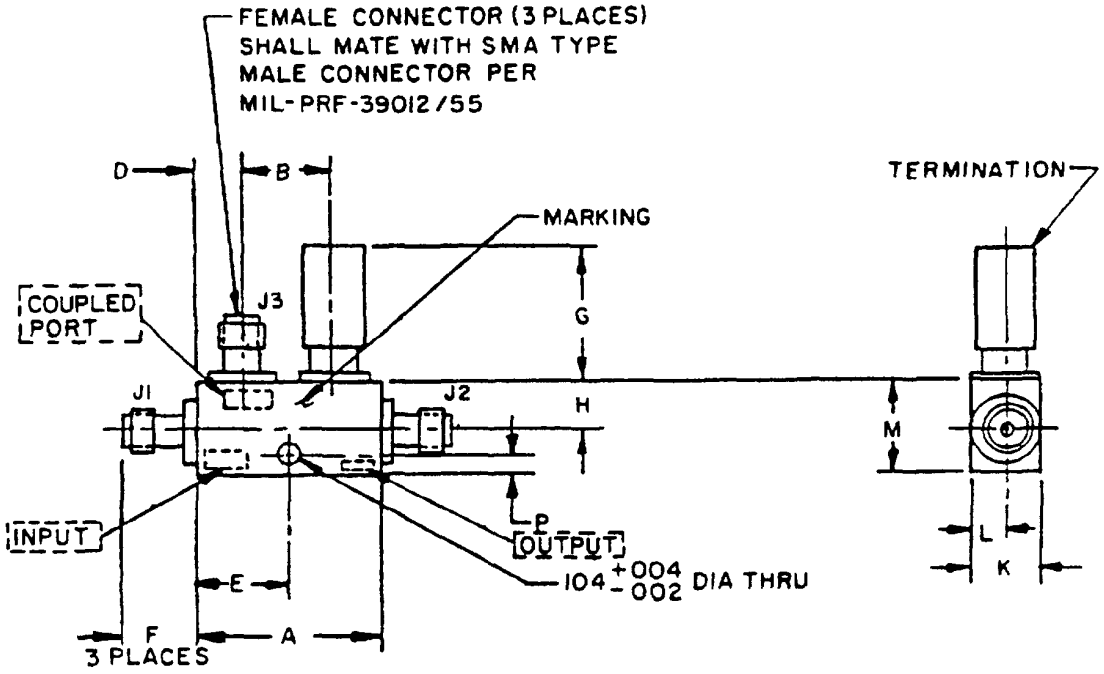

Inches	mm
.002	0.05
.004	0.10
.104	2.64

NOTES:
1. Dimensions are in inches.
2. Metric equivalents are given for information only.

FIGURE 2. Dimensions and configuration for part number M15370/9-009 through M15370/9-014, M15370/9-017, M15370/9-018, M15370/9-022 through M15370/9-025, M15370/9-027, M15370/9-028, M15370/9-043, M15370/9-045 and M15370/9-046.

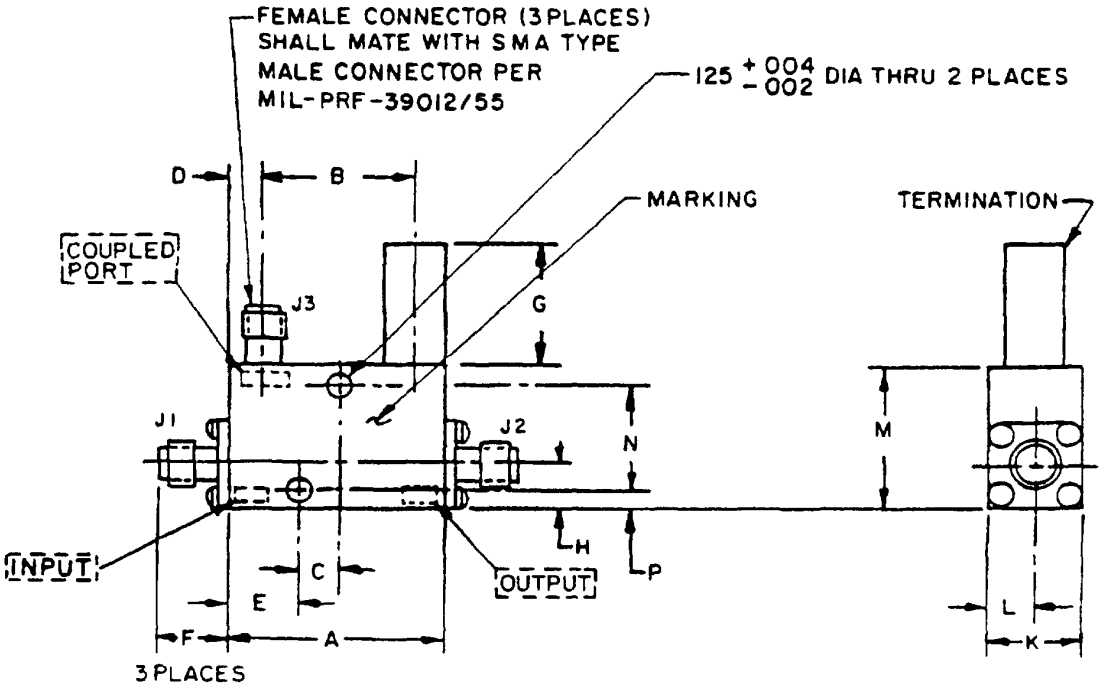

Inches	mm
.002	0.05
.004	0.10
.125	3.18

NOTES:
1. Dimensions are in inches.
2. Metric equivalents are given for information only.

FIGURE 3. Dimensions and configuration for part number M15370/9-015 and M15370/9-016.

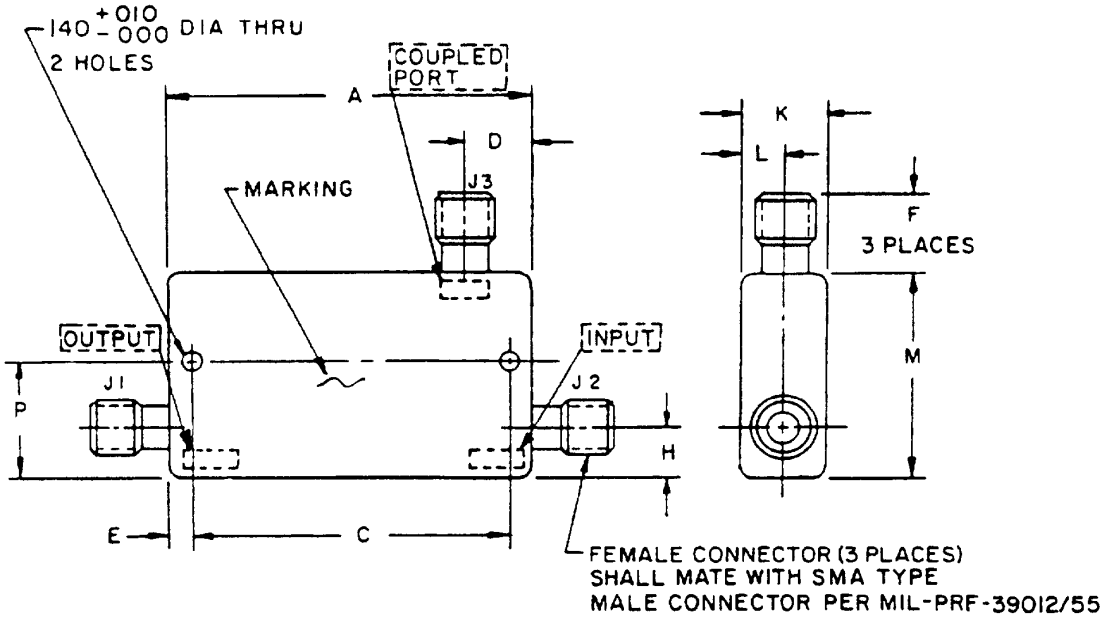

Inches	mm
.010	0.25
.140	3.56

NOTES:
1. Dimensions are in inches.
2. Metric equivalents are given for information only.

FIGURE 4. Dimensions and configuration for part numbers M15370/9-019 through M15370/9-021, M15370/9-032 through M15370/9-034 and M15370/9-044.

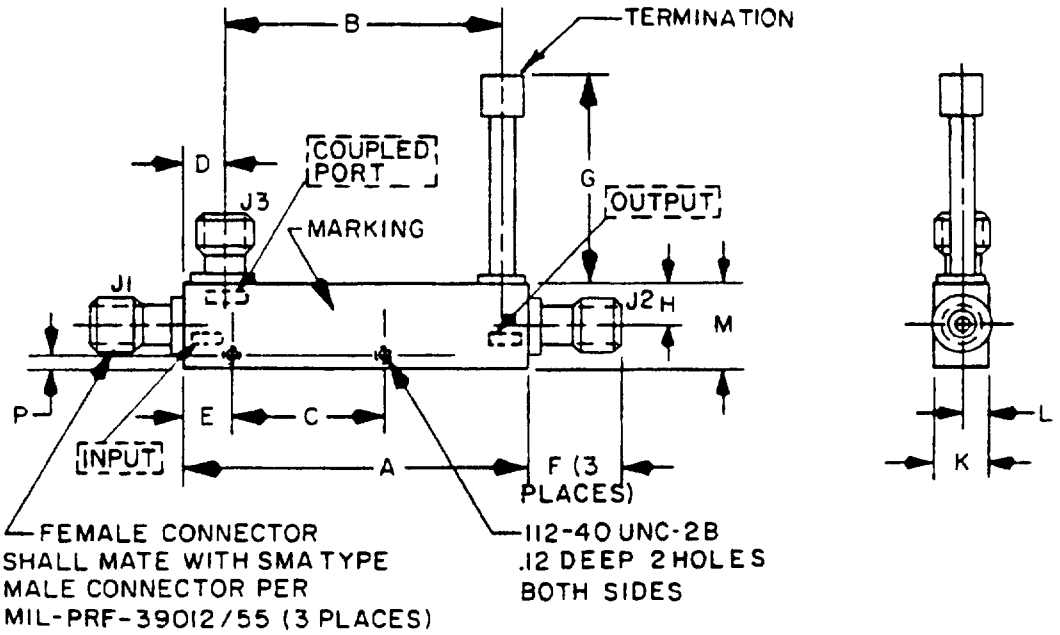

Inches	mm
.112	2.84
.12	3.05

NOTES:
1. Dimensions are in inches.
2. Metric equivalents are given for information only.

FIGURE 5. Dimensions and configuration for part numbers M15370/9-026.

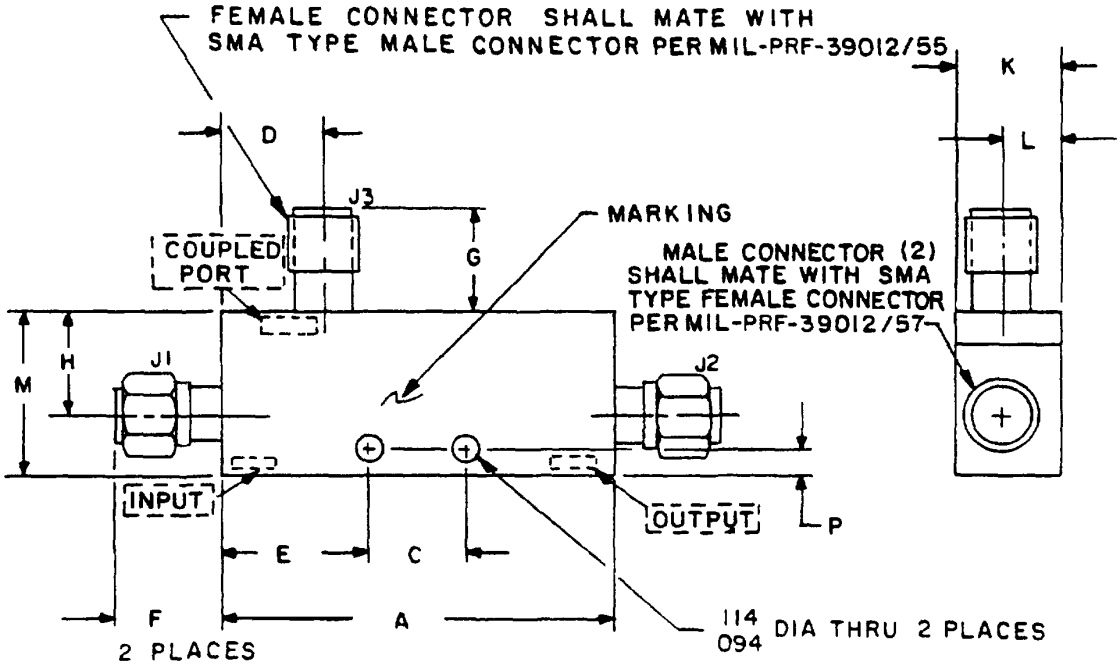

Inches	mm
.094	2.38
.114	2.90

NOTES:
1. Dimensions are in inches.
2. Metric equivalents are given for information only.

FIGURE 6. Dimensions and configuration for part numbers M15370/9-039.

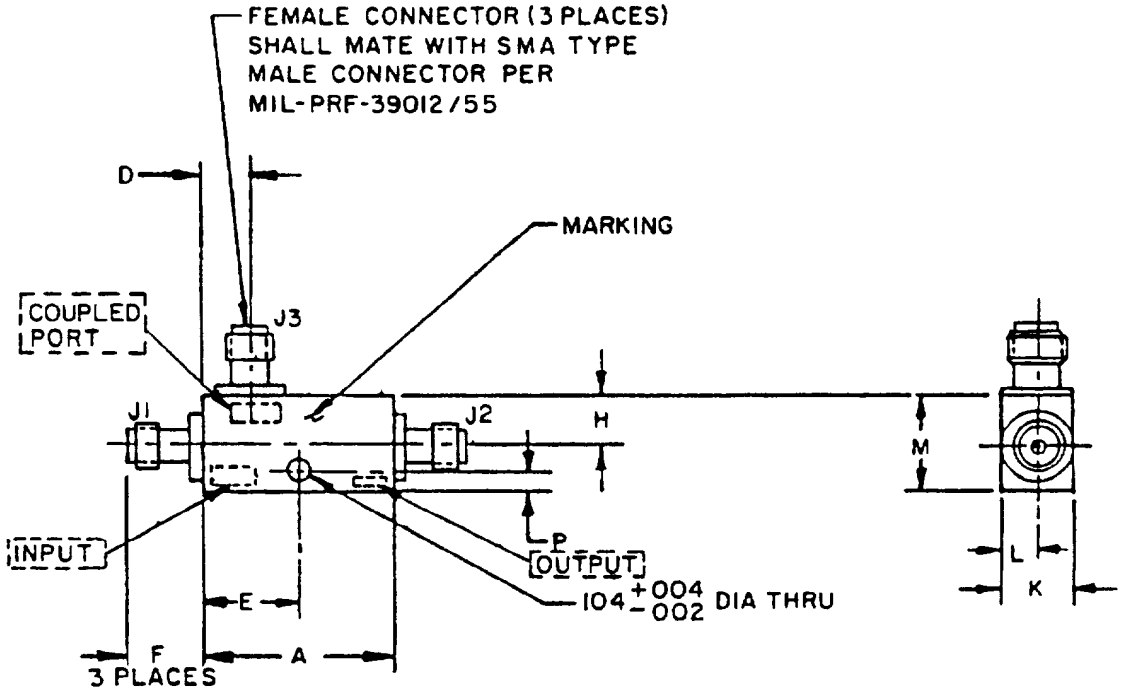

Inches	mm
.002	0.05
.004	0.10
.104	2.64

NOTES:
1. Dimensions are in inches.
2. Metric equivalents are given for information only.

FIGURE 7. Dimensions and configuration for part numbers M15370/9-040 and M15370/9-041.

REQUIREMENTS:

Design, construction, and physical dimensions: See figures 1 through 7 and table I.

Coaxial contact captivation: The center contact of each coaxial connector shall be captured in a method that will resist an axial force, in either direction, of 13 pounds maximum and a rotational torque of 4 ounce-inches maximum without loosening of parts or other damage and the center contact shall meet the dimensional interface requirements as specified in MIL-PRF-39012 for SMA connectors.

Operating temperature range:

-54°C to +85°C for dash numbers 032 through 034, 039 through 041, and 044.
-54°C to +95°C for dash number 035.
-54°C to +105°C for dash numbers 001 through 031, 036, 038, 042, 045, 046, 049, and 051.
-55°C to +125°C for dash number 050.

Weight: See table I.

Electrical: See table II.

Marking: Part number shall be located as shown on figures 1 through 5.

Part number: M15370/9- (and a dash number from table I).

TABLE I. Dimensions and physical requirements.

Dash number	Mounting configuration (figure)	Dimensions 1/ 2/ 3/													Weight (max)			Shock method 213
		A Max	B 4/ ±.02 (0.5)	C 5/ ±.010 (0.25)	D 4/ ±.02 (0.5)	E 4/ ±.02 (0.5)	F Max	G Max	H Max	K Max	L Max	M Max	N 5/ ±.010 (0.25)	P Max	lbs.	g	oz	
001N S	1	1.83 (46.5)	1.28 (32.5)	.94 (23.9)	.25 (6.4)	.42 (10.7)	.39 (9.9)	.47 (11.9)	.30 (7.6)	.40 (10.2)	.20 (5.1)	.54 (13.7)	---	.11 (2.8)	.05	23	0.8	N/A
002N S	1	1.83 (46.5)	1.28 (32.5)	.94 (23.9)	.25 (6.4)	.42 (10.7)	.39 (9.9)	.47 (11.9)	.30 (7.6)	.40 (10.2)	.20 (5.1)	.54 (13.7)	---	.11 (2.8)	.05	23	0.8	N/A
003N S	1	1.83 (46.5)	1.28 (32.5)	.94 (23.9)	.25 (6.4)	.42 (10.7)	.39 (9.9)	.47 (11.9)	.30 (7.6)	.40 (10.2)	.20 (5.1)	.54 (13.7)	---	.11 (2.8)	.05	23	0.8	N/A
004N S	1	1.83 (46.5)	1.28 (32.5)	.94 (23.9)	.25 (6.4)	.42 (10.7)	.39 (9.9)	.47 (11.9)	.35 (8.9)	.40 (10.2)	.20 (5.1)	.54 (13.7)	---	.11 (2.8)	.05	23	0.8	N/A
005N S	1	1.20 (30.5)	.65 (16.5)	.34 (8.6)	.25 (6.4)	.42 (10.7)	.39 (9.9)	.47 (11.9)	.30 (7.6)	.40 (10.2)	.20 (5.1)	.54 (13.7)	---	.11 (2.8)	.04	17	0.6	N/A
006N S	1	1.20 (30.5)	.65 (16.5)	.34 (8.6)	.25 (6.4)	.42 (10.7)	.39 (9.9)	.47 (11.9)	.30 (7.6)	.40 (10.2)	.20 (5.1)	.54 (13.7)	---	.11 (2.8)	.04	17	0.6	N/A
007N S	1	1.20 (30.5)	.65 (16.5)	.34 (8.6)	.25 (6.4)	.42 (10.7)	.39 (9.9)	.47 (11.9)	.30 (7.6)	.40 (10.2)	.20 (5.1)	.54 (13.7)	---	.11 (2.8)	.04	17	0.6	N/A
008N S	1	1.20 (30.5)	.65 (16.5)	.34 (8.6)	.25 (6.4)	.42 (10.7)	.39 (9.9)	.47 (11.9)	.35 (8.9)	.40 (10.2)	.20 (5.1)	.54 (13.7)	---	.11 (2.8)	.04	17	0.6	N/A
009N S	2	1.04 (26.4)	.50 (12.7)	---	.25 (6.4)	.50 (12.7)	.39 (9.9)	.75 (19.0)	.30 (7.6)	.40 (10.2)	.20 (5.1)	.54 (13.7)	---	.11 (2.8)	.04	17	0.6	N/A
010N S	2	1.04 (26.4)	.50 (12.7)	---	.25 (6.4)	.50 (12.7)	.39 (9.9)	.75 (19.0)	.30 (7.6)	.40 (10.2)	.20 (5.1)	.54 (13.7)	---	.11 (2.8)	.04	17	0.6	N/A
011N S	2	1.04 (26.4)	.50 (12.7)	---	.25 (6.4)	.50 (12.7)	.39 (9.9)	.75 (19.0)	.30 (7.6)	.40 (10.2)	.20 (5.1)	.54 (13.7)	---	.11 (2.8)	.04	17	0.6	N/A
012N S	2	1.04 (26.4)	.50 (12.7)	---	.25 (6.4)	.50 (12.7)	.39 (9.9)	.75 (19.0)	.30 (7.6)	.40 (10.2)	.20 (5.1)	.54 (13.7)	---	.11 (2.8)	.04	20	0.7	N/A
013N S	2	1.04 (26.4)	.50 (12.7)	---	.25 (6.4)	.50 (12.7)	.39 (9.9)	.75 (19.0)	.29 (7.4)	.40 (10.2)	.20 (5.1)	.54 (13.7)	---	.11 (2.8)	.04	20	0.7	N/A
014N S	2	1.04 (26.4)	.50 (12.7)	---	.25 (6.4)	.50 (12.7)	.39 (9.9)	.75 (19.0)	.30 (7.6)	.40 (10.2)	.20 (5.1)	.54 (13.7)	---	.11 (2.8)	.04	20	0.7	N/A
015N S	3	1.27 (32.3)	.81 (20.6)	.21 (5.3)	.27 (6.9)	.40 (10.2)	.39 (9.9)	.75 (19.0)	.27 (6.9)	.53 (13.5)	.26 (6.6)	.83 (21.1)	.59 (15.0)	.14 (3.6)	.07	34	1.2	N/A
016N S	3	1.27 (32.3)	.81 (20.6)	.21 (5.3)	.27 (6.9)	.40 (10.2)	.39 (9.9)	.75 (19.0)	.27 (6.9)	.53 (13.5)	.26 (6.6)	.83 (21.1)	.59 (15.0)	.14 (3.6)	.07	34	1.2	N/A
017N S	2	1.04 (26.4)	.50 (12.7)	---	.25 (6.4)	.50 (12.7)	.39 (9.9)	.812 (20.6)	.43 (10.9)	.415 (10.54)	.207 (5.26)	.66 (16.8)	---	.11 (2.8)	.07	34	1.2	N/A
018N S	2	1.04 (26.4)	.50 (12.7)	---	.25 (6.4)	.50 (12.7)	.39 (9.9)	.75 (19.0)	.43 (10.9)	.40 (10.2)	.20 (5.1)	.66 (16.8)	.11 (2.8)	.11 (2.8)	.05	24	0.8	N/A

See footnotes at end of table.

TABLE I. Dimensions and physical requirements - Continued.

Dash number	Mounting configuration (figure)	Dimensions 1/ 2/ 3/													Weight (max)			Shock method 213
		A Max	B 4/ ±.02 (0.5)	C 5/ ±.010 (0.25)	D 4/ ±.02 (0.5)	E 4/ ±.02 (0.5)	F Max	G Max	H Max	K Max	L Max	M Max	N 5/ ±.010 (0.25)	P Max	lbs.	g	oz	
019N S	4	2.00 6/ (50.8)	---	1.750 7/ (44.45)	.28 7/ (7.1)	.12 7/ (3.0)	.31 8/ (7.9)	---	.28 6/ (7.1)	.44 6/ (11.2)	---	1.25 6/ (31.8)	---	.62 6/ (15.7)	.11	51	1.8	N/A
020N S	4	2.00 6/ (50.8)	---	1.750 7/ (44.45)	.28 7/ (7.1)	.12 7/ (3.0)	.31 8/ (7.9)	---	.28 6/ (7.1)	.44 6/ (11.2)	---	1.25 6/ (31.8)	---	.62 6/ (15.7)	.11	51	1.8	N/A
021N S	4	2.00 6/ (50.8)	---	1.750 7/ (44.45)	.28 7/ (7.1)	.12 7/ (3.0)	.31 8/ (7.9)	---	.28 6/ (7.1)	.44 6/ (11.2)	---	1.25 6/ (31.8)	---	.62 6/ (15.7)	.11	51	1.8	N/A
022N S	2	1.04 (26.4)	.50 (12.7)	---	.25 (6.4)	.50 (12.7)	.39 (9.9)	.75 (19.0)	.30 (7.6)	.40 (10.2)	.20 (5.1)	.54 (13.7)	---	.11 (2.8)		16	.57	N/A
023N S	2	1.04 (26.4)	.50 (12.7)	---	.25 (6.4)	.50 (12.7)	.39 (9.9)	.75 (19.0)	.30 (7.6)	.40 (10.2)	.20 (5.1)	.54 (13.7)	---	.11 (2.8)		16	.57	J 9/
024N S	2	1.04 (26.4)	.50 (12.7)	---	.25 (6.4)	.50 (12.7)	.39 (9.9)	.75 (19.0)	.30 (7.6)	.40 (10.2)	.20 (5.1)	.66 (16.8)	---	.11 (2.8)		16	.57	J 9/
025N S	2	1.04 (26.4)	.50 (12.7)	---	.25 (6.4)	.50 (12.7)	.39 (9.9)	.75 (19.0)	.43 (10.9)	.40 (10.2)	.20 (5.1)	.66 (16.8)	---	.11 (2.8)		20	.70	N/A
026N S	5	3.50 (88.9)	3.00 (76.4)	2.00 (50.8)	.27 (6.9)	.75 (19.0)	.39 (9.9)	.89 (22.6)	.45 (11.4)	.53 (13.5)	.27 (6.9)	.75 (19.0)	---	.37 (9.4)		65	2.3	J 9/
027N S	2	1.16 (29.4)	.66 (12.7)	---	.25 (6.4)	.58 (14.7)	.39 (9.9)	.25 (6.4)	.30 (7.6)	.40 (10.2)	.20 (5.1)	.66 (16.8)	---	.11 (2.8)		20	.70	N/A
028N S	2	1.80 (45.7)	1.28 (32.5)	---	.25 (6.4)	.90 (22.9)	.39 (9.9)	.25 (6.4)	.30 (7.6)	.40 (10.2)	.20 (5.1)	.66 (16.8)	---	.11 (2.8)		25	.90	N/A
029N S	1	1.83 (46.5)	1.28 (32.5)	.94 (23.9)	.25 (6.4)	.42 (10.7)	.39 (9.9)	.47 (11.9)	.30 (7.6)	.40 (10.2)	.20 (5.1)	.54 (13.7)	---	.11 (2.8)	.05	23	0.8	N/A
030N S	1	1.83 (46.5)	1.28 (32.5)	.94 (23.9)	.25 (6.4)	.42 (10.7)	.39 (9.9)	.47 (11.9)	.30 (7.6)	.40 (10.2)	.20 (5.1)	.54 (13.7)	---	.11 (2.8)	.05	23	0.8	N/A
031N S	1	1.83 (46.5)	1.28 (32.5)	.94 (23.9)	.25 (6.4)	.42 (10.7)	.39 (9.9)	.47 (11.9)	.35 (8.9)	.40 (10.2)	.20 (5.1)	.59 (13.7)	---	.11 (2.8)	.05	23	0.8	N/A
032N S	4	2.40 (61.0)	---	2.15 (54.6)	.50 (12.7)	.12 (3.0)	.39 (9.9)	---	.28 (7.1)	.42 (10.7)	.21 (5.4)	1.25 (31.8)	---	.62 (15.7)		50	1.75	N/A
033N S	4	2.0 (50.8)	---	1.75 (44.5)	.28 (7.2)	.12 (3.0)	.39 (9.9)	---	.28 (7.1)	.42 (10.7)	.21 (5.4)	1.25 (31.8)	---	.62 (15.7)		42	1.50	N/A
034N S	4	2.40 (61.0)	---	2.15 (54.6)	.50 (12.7)	.12 (3.0)	.39 (9.9)	---	.28 (7.1)	.42 (10.7)	.21 (5.4)	1.25 (31.8)	---	.62 (15.7)		50	1.75	N/A
035N S	1	1.80 (45.7)	1.28 (32.5)	.94 (23.9)	.25 (6.4)	.42 (10.7)	.39 (9.9)	.47 (11.9)	.35 (8.9)	.40 (10.2)	.20 (5.1)	.56 (14.2)	---	.11 (2.8)	.05	23	0.8	N/A
036N S	1	1.83 (46.5)	1.28 (32.5)	.875 (22.23)	.27 (6.9)	.47 (11.9)	.39 (9.9)	.81 (20.6)	.35 (8.9)	.40 (10.2)	.20 (5.1)	.67 (17.0)	---	.16 (4.1)			1	N/A

See footnotes at end of table.

TABLE I. Dimensions and physical requirements - Continued.

Dash number	Mounting configuration (figure)	Dimensions 1/ 2/ 3/													Weight (max)			Shock method 213
		A Max	B 4/ ±.02 (0.5)	C 5/ ±.010 (0.25)	D 4/ ±.02 (0.5)	E 4/ ±.02 (0.5)	F Max	G Max	H Max	K Max	L Max	M Max	N 5/ ±.010 (0.25)	P Max	lbs.	g	oz	
037N S	1	1.79 (45.5)	1.27 (32.3)	.875 (22.23)	.26 (6.6)	.450 (11.4)	.39 (9.9)	.75 (19.0)	.32 (8.1)	.42 (10.7)	.21 (5.3)	.625 (15.9)	---	.145 (3.6)	.07	34	1.2	N/A
038N S	1	1.62 (41.4)	1.08 (27.4)	.875 (22.23)	.27 (6.9)	.36 (9.1)	.39 (9.9)	.64 (16.3)	.38 (9.7)	.50 (12.7)	.24 (6.4)	.69 (17.5)	---	.11 (2.8)	.07	34	1.2	N/A
039N S	5	1.46 (37.1)	---	.344 (8.7)	.375 (9.53)	.533 (13.5)	.500 (9.9)	.38 (16.3)	.40 (9.7)	.41 (10.4)	.24 (6.1)	.625 (15.9)	---	.11 (2.8)	---	---	1.5	K 10/
040N S	7	1.03 (26.2)	---	---	.25 (6.4)	.533 (13.5)	.39 (9.9)	---	.32 (8.1)	.40 (10.2)	.20 (5.1)	.500 (12.70)	---	.11 (2.8)	---	28	1	N/A
041N S	7	1.03 (26.2)	---	---	.25 (6.4)	.533 (13.5)	.39 (9.9)	---	.32 (8.1)	.40 (10.2)	.20 (5.1)	.500 (12.70)	---	.11 (2.8)	---	28	1	N/A
042N S	1	3.24 (82.3)	2.72 (69.1)	1.00 (25.4)	.27 (6.9)	1.12 (28.4)	.39 (9.9)	.81 (20.6)	.48 (12.2)	.56 (14.2)	.28 (7.1)	.88 (22.4)	---	.17 (4.3)	---	77	2.7	N/A
043N S	1	3.48 (88.4)	2.94 (74.7)	2.32 (58.9)	.27 (6.9)	.58 (14.7)	.39 (9.9)	.81 (20.6)	.44 (11.2)	.53 (13.5)	.26 (6.6)	.73 (18.5)	---	.11 (2.8)	---	77	2.7	N/A
044N S	4	2.00 (50.8)	---	1.75 (44.5)	.28 (7.1)	.12 (3.0)	.39 (9.9)	---	.30 (7.6)	.42 (10.7)	.21 (5.3)	1.25 (31.8)	---	.62 (15.7)	---	42	1.5	N/A
045N S	2	1.00 (25.4)	.50 (12.7)	---	.26 (6.6)	.50 (12.7)	.39 (9.9)	.64 (16.3)	.30 (7.6)	.40 (10.2)	.20 (50.8)	.54 (13.7)	---	.11 (2.8)	---	50	1.75	N/A
046N S	2	1.25 (31.8)	.77 (19.6)	---	.26 (6.6)	.63 (16.0)	.39 (9.9)	.40 (10.2)	.45 (11.4)	.38 (9.7)	.19 (4.8)	.75 (19.0)	---	.11 (2.8)	---	50	1.75	N/A
047N S	1	1.40 (35.6)	.86 (21.8)	.500 (12.70)	.26 (6.6)	.45 (11.4)	.39 (9.9)	.81 (20.6)	.39 (9.9)	.42 (10.7)	.21 (5.4)	.66 (16.8)	---	.11 (2.8)	.07	34	1.2	N/A
048N S	1	1.40 (35.6)	.86 (21.8)	.500 (12.70)	.26 (6.6)	.45 (11.4)	.39 (9.9)	.81 (20.6)	.39 (9.9)	.42 (10.7)	.21 (5.4)	.66 (16.8)	---	.11 (2.8)	.07	34	1.2	N/A
049N S	1	2.08 (52.8)	1.57 (39.9)	.96 (24.4)	.25 (6.4)	.56 (14.2)	.39 (9.9)	.47 (11.9)	.41 (10.4)	.53 (13.5)	.26 (6.6)	.69 (17.5)	---	.35 (8.9)	.07	34	1.2	N/A
050N S	1	2.160 (54.86)	1.625 max (41.28)	1.125 max (28.58)	.25 (6.4)	.52 max (13.2)	.39 (9.9)	.64 (16.3)	.50 (12.7)	.54 (13.7)	.27 (6.9)	.89 (22.6)	---	.45 (11.4)	.07	34	1.2	A
051N S	1	5.73 (145.5)	5.23 (132.8)	2.88 (73.2)	.25 (6.4)	1.42 (36.1)	.39 (9.9)	.64 (16.3)	.38 (9.7)	.50 (12.7)	.25 (6.4)	.69 (17.5)	---	.11 (2.8)	---	100	---	N/A
052N S	3	1.25 (31.8)	.77 (19.6)	.23 (5.8)	.25 (6.4)	.40 (10.2)	.39 (9.9)	.56 (14.2)	.25 (6.4)	.53 (13.5)	.26 (6.6)	.83 (21.1)	.58 (14.7)	.12 (3.1)	---	33	1.3	N/A

1/ Dimensions are in inches.
2/ Metric equivalents are given for general information only.
3/ Metric equivalents are in parentheses.
4/ ± .02 (0.5 mm).
5/ In cases where mounting with flat-head screws is used, the tolerance shall not exceed ±.005 inch (0.13 mm).
6/ Dimension given is nominal, tolerance is ±.030 (0.76 mm).
7/ Dimension given is nominal, tolerance is ±.010 (0.25 mm).
8/ Typical dimension.
9/ Except shock pulse shall be 7.0 ±.4 G's for 50 ±1 milliseconds.
10/ Except shock pulse shall be 20 G's peak value.

TABLE II. Electrical requirements.

Dash Number	Frequency range	Coupling (dB)		Coupling variation (dB) max	Effective directivity (dB)	Insertion loss (dB) max	VSWR max		RF Input power to primary			Reflected avg power (max)
		Nominal	Tolerance				Primary line	Secondary line	Over frequency range	Avg	Peak	
	GHz								Watts	Watts	KW	Watts
001NS	1-2	6	±1.0	±0.6	25	0.2	1.15:1	1.15:1	50	50	3	2
002NS	1-2	10	±1.2	±0.75	25	0.2	1.10:1	1.10:1	50	50	3	5
003NS	1-2	20	±1.2	±0.75	27	0.2	1.10:1	1.10:1	50	50	3	50
004NS	1-2	30	±1.2	±0.75	27	0.2	1.10:1	1.10:1	50	50	3	50
005NS	2-4	6	±1.0	±0.6	22	0.2	1.15:1	1.15:1	50	50	3	2
006NS	2-4	10	±1.2	±0.75	22	0.2	1.15:1	1.15:1	50	50	3	5
007NS	2-4	20	±1.2	±0.75	22	0.2	1.15:1	1.15:1	50	50	3	50
008NS	2-4	30	±1.2	±0.75	22	0.2	1.15:1	1.15:1	50	50	3	50
009NS	4-8	6	±1.0	±0.6	18	0.25	1.25:1	1.25:1	50	50	3	2
010NS	4-8	10	±1.2	±0.75	20	0.25	1.25:1	1.25:1	50	50	3	5
011NS	4-8	20	±1.2	±0.75	20	0.25	1.25:1	1.25:1	50	50	3	50
012NS	7-12.4	6	±1.0	±0.5	15	0.4	1.30:1	1.30:1	50	50	3	2
013NS	7-12.4	10	±1.0	±0.5	17	0.4	1.30:1	1.30:1	50	50	3	5
014NS	7-12.4	20	±1.0	±0.5	17	0.3	1.25:1	1.25:1	50	50	3	50
015NS	12.4-18	6	±1.0	±0.5	15	0.3	1.35:1	1.40:1	50	50	3	2
016NS	12.4-18	10	±1.0	±0.5	15	0.3	1.30:1	1.40:1	50	50	3	5
017NS	12.4-18	20	±1.0	±0.5	15	0.5	1.35:1	1.40:1	50	50	3	50
018NS	7-12.4	30	±1.0	±0.5	17	0.3	1.25:1	1.25:1	50	50	3	50
019NS	11-17	10	±1.0	±0.5	15	0.3	1.30:1	1.30:1	5	5	5	5

See footnotes at end of table.

TABLE II. Electrical requirements - Continued.

Dash Number	Frequency range	Coupling (dB)		Coupling variation (dB) max	Effective directivity (dB)	Insertion loss (dB) max	VSWR max		RF Input power to primary			Reflected avg power (max)
		Nominal	Tolerance				Primary line	Secondary line	Over frequency range	Avg	Peak	
	GHz								Watts	Watts	KW	Watts
020NS	11-17	20	±1.0	±0.5	20	0.5	1.30:1	1.30:1	40	40	5	40
021NS	11-17	30	±1.0	±0.5	20	0.5	1.30:1	1.30:1	40	40	5	40
022NS	7.5-16	6	±1.1	±0.6	12	0.6	1.35:1	1.45:1	50	50	2	2
023NS	7.5-16	10	±1.5	±0.75	12	0.6	1.35:1	1.45:1	50	50	2	5
024NS	7.5-16	20	±1.25	±0.75	15	0.5	1.35:1	1.45:1	50	50	2	50
025NS	7.5-16	30	±1.25	±0.75	15	0.5	1.35:1	1.45:1	50	50	2	50
026NS	1-18	16	±1.0	±0.5	1.0-12.4 GHz: 15 12.4-18.0 GHz 12	0.8	1.40:1	1.50:1	20	20	3	5
027NS	1-2	10	±1.0	±0.75	25	0.2	1.15:1	1.15:1	50	50	4	10
028NS	1-2	30	±1.0	±0.75	25	0.2	1.15:1	1.15:1	50	50	4	50
029NS	1-2	10	±1.2	±0.75	25	0.2	1.10:1	1.10:1	50	50	3	5
030NS	1-2	20	±1.2	±0.75	27	0.2	1.10:1	1.10:1	50	50	3	50
031NS	1-2	30	±1.2	±0.75	27	0.2	1.10:1	1.10:1	50	50	3	50
032NS	2-4	20	±1.2	±0.75	20	0.2	1.25:1	1.25:1	50	50	10	5
033NS	4-8	10	±1.2	±0.75	18	0.25	1.25:1	1.25:1	5	5	7.5	2
034NS	4-8	30	±1.2	±0.75	20	0.25	1.20:1	1.20:1	50	50	7.5	50
035NS	2-6	10	±1.0	±0.3	17	1.0	1.30:1	1.30:1	50	50	3	5
036NS	2-8	6	±1.0	±0.4	20	0.5	1.30:1	1.30:1	50	50	3	2
037NS	2-8	10	±0.75	±0.5	15	1.2	1.50:1	1.50:1	50	50	3	5

See footnotes at end of table.

TABLE II. Electrical requirements - Continued.

Dash Number	Frequency range	Coupling (dB)		Coupling variation (dB) max	Effective directivity (dB)	Insertion loss (dB) max	VSWR max		RF Input power to primary			Reflected avg power (max)
		Nominal	Tolerance				Primary line	Secondary line	Over frequency range	Avg	Peak	
	GHz								Watts	Watts	KW	Watts
038NS	3.7-8.3	10	±1.0	±0.5	20	0.4	1.30:1	1.30:1	40	40	3	5
039NS	4.0-12.4	10	±1.0	±0.5	17	0.5	1.35:1	1.35:1	50	50	1	2
040NS	7.0-12.4	6	±1.0	±0.75	16	0.4	1.45:1	1.45:1	40	40	1	1
041NS	7.0-12.4	10	±1.0	±0.75	16	0.4	1.45:1	1.45:1	20	20	1	2
042NS	1-12.4	10	±1.5	±0.4	12	0.7	1.35:1	1.50:1	20	20	3	2
043NS	1-12.4	20	±1.5	±0.4	15	0.7	1.35:1	1.50:1	20	20	3	5
044NS	12.4-18.0	10	±1.0	±0.5	15	0.35	1.30:1	1.50:1	5	5	5	5
045NS	7-18.0	10	±1.30	±0.5	15	0.6	1.50:1	1.50:1	30	30	2	5
046NS	7-18.0	10	±1.25	±0.75	15	0.5	1.40:1	1.40:1	30	30	2	5
047NS	6-18.0	6	±1.0	±0.5	15	0.8	1.40:1	1.40:1	50	50	3	2
048NS	6-18.0	10	±1.0	±0.5	15	0.6	1.40:1	1.40:1	50	50	3	2
049NS	2-18.5	10	±1.0	±0.5	13	1.0	1.35:1	1.35:1	20	20	3	5
050NS	2-18.0	10	±1.0	±1.0	12	1.2	1.40:1	1.50:1	20	20	3	5
051NS	.4-18.0	10	±1.2	±1.0	7.7	1.7	1.40:1	1.40:1	20	20	3	5
052NS	18-26.5	10	±1.0	±0.5	15	0.6	1.40:1	1.40:1	30	30	3	5

1/ Inactive for new design, use dash number -002 for new design.
2/ Inactive for new design, use dash number -004 for new design.
3/ Same as dash numbers -002, -003, and -004, except for sealant around case.
4/ Inactive for new design, use dash number -007 for new design.
5/ Inactive for new design, use dash number -010 for new design.
6/ Inactive for new design, use dash number -016 for new design.
7/ Inactive for new design, use dash number -048 for new design.

Custodians:
Army - CR
Navy - EC
Air Force - 11
DLA - CC

Review activities:
Army - MI
Navy - AS, CG, MC, OS
Air Force - 99

Preparing activity:
DLA - CC

(Project 5985-1266)