INCH-POUND

MIL-DTL-22641/20C
31 January 2000
SUPERSEDING
MIL-A-22641/20B
21 September 1978

DETAIL SPECIFICATION SHEET

ADAPTERS, COAXIAL TO WAVEGUIDE
(SERIES SMA TO WAVEGUIDE - CLASS 5)

This specification is approved for use by all Departments and Agencies of the Department of Defense.

The requirements for acquiring the adapters described herein shall consist of this document and the latest issue of MIL-DTL-22641.

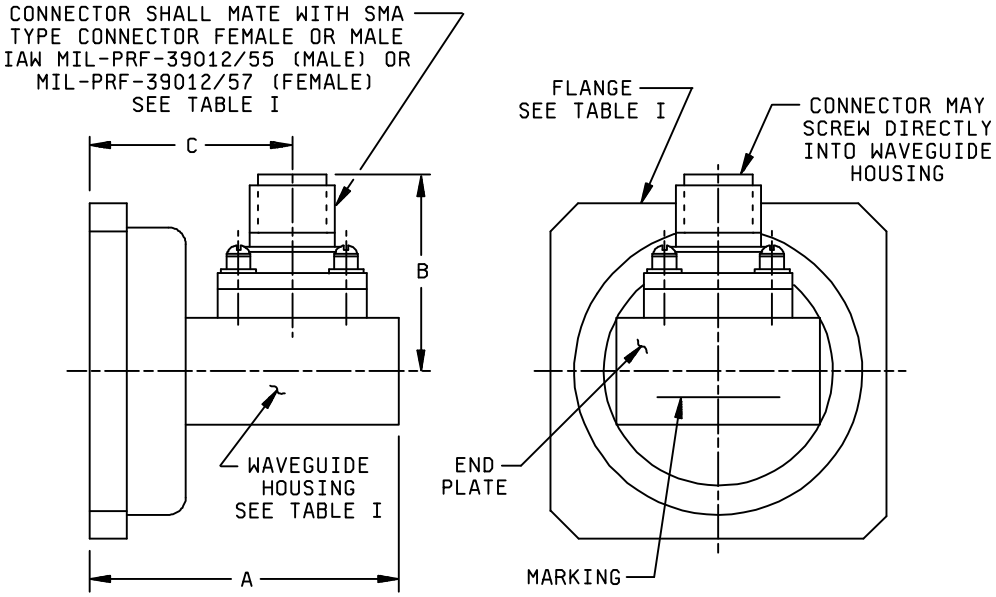

FIGURE 1. Adapters, coaxial to waveguide (class 5).

REQUIREMENTS:

Design, construction, and physical dimensions: See figure 1 and table I.

Operating temperature range: -54°C to +125°C.

Frequency range: See table I.

VSWR: See table I. VSWR over 50 percent frequency range shall be VSWR measured over any continuous frequency band of width equal to 50 percent of the entire frequency range, chosen at the discretion of the tester.

RF insertion loss: See table I.

Connector: Connector bodies shall be corrosion-resistant steel.

Flange, waveguide: See table I.

Housing, waveguide: See table I.

Marking: See figure 1.

Part or Identifying Number (PIN): M22641/20- (dash number from table I).

DISTRIBUTION STATEMENT A. Approved for public release; distribution is unlimited.

TABLE I. Adapters, coaxial to waveguide (class 5 - SMA to waveguide).

Dash number	Frequency range (GHz)	VSWR over entire frequency range (max) 4/ 5/	VSWR over 50 percent frequency range (max) 4/ 5	RF insertion loss dB (max) 5/	Wave-guide housing 6/	Flange 7/	Wave-guide and flange material	Connector	Dimensions 1/ 2/ 3/		
									A (max)	B (max)	C (max)
01	2.60 - 3.95	1.10:1	1.05:1	0.05	M85/1-041 (RG-75/U)	M3922/56-002 (UG-584/U)	Aluminum	Male	2.235 (56.77)	1.219 (30.96)	1.269 (32.23)
02	2.60 - 3.95	1.10:1	1.05:1	0.05	M85/1-041 (RG-75/U)	M3922/56-002 (UG-584/U)	Aluminum	Female	2.235 (56.77)	1.219 (30.96)	1.349 (34.26)
03	8.2 - 12.4	1.10:1	1.05:1	0.15	M85/1-077 (RG-67/U)	M3922/53-003 (UG-135/U)	Aluminum	Male	1.296 (32.92)	0.807 (20.50)	0.940 (23.88)
04	8.2 - 12.4	1.10:1	1.05:1	0.15	M85/1-077 (RG-67/U)	M3922/53-003 (UG-135/U)	Aluminum	Female	1.296 (32.92)	0.734 (18.64)	0.940 (23.88)
05	12.4 - 18.0	1.10:1	1.05:1	0.20	M85/1-090 (RG-349/U)	M3922/53-006 (UG-1665/U)	Aluminum	Male	1.265 (32.13)	0.782 (19.86)	0.941 (23.90)
06	12.4 - 18.0	1.10:1	1.05:1	0.20	M85/1-090 (RG-349/U)	M3922/53-006 (UG-1665/U)	Aluminum	Female	1.265 (32.13)	0.687 (17.45)	0.941 (23.90)
07	2.60 - 3.95	1.10:1	1.05:1	0.05	M85/1-043 (RG-48/U)	M3922/56-001 (UG-53/U)	Copper	Male	2.235 (56.77)	1.219 (30.96)	1.269 (32.23)
08	2.60 - 3.95	1.10:1	1.05:1	0.05	M85/1-043 (RG-48/U)	M3922/56-001 (UG-53/U)	Copper	Female	2.235 (56.77)	1.219 (30.96)	1.269 (32.23)
09	8.2 - 12.4	1.10:1	1.05:1	0.15	M85/1-079 (RG-52/U)	M3922/53-001 (UG-39/U)	Copper	Male	1.296 (32.92)	0.807 (20.50)	0.940 (23.88)
10	8.2 - 12.4	1.10:1	1.05:1	0.15	M85/1-079 (RG-52/U)	M3922/53-001 (UG-39/U)	Copper	Female	1.296 (32.92)	0.807 (20.50)	0.940 (23.88)
11	12.4 - 18.0	1.10:1	1.05:1	0.20	M85/1-089 (RG-91/U)	M3922/53-005 (UG-419/U)	Copper	Male	1.256 (31.90)	0.734 (18.64)	0.940 (23.88)
12	12.4 - 18.0	1.25:1	1.05:1	0.20	M85/1-089 (RG-91/U)	M3922/53-005 (UG-419/U)	Copper	Female	1.256 (31.90)	0.782 (19.86)	0.940 (23.88)
13	7.0 - 11.0	1.10:1	1.05:1	0.15	M85/1-158	M3922/70-014	Aluminum	Male	1.350 (34.29)	0.970 (24.64)	0.950 (24.13)
14	7.0 - 11.0	1.10:1	1.05:1	0.15	M85/1-158	M3922/70-014	Aluminum	Female	1.350 (34.29)	0.970 (24.64)	0.950 (24.13)
15	12.4 - 18.0	1.10:1	1.05:1	0.20	M85/1-090 (RG-349/U)	M3922/70-020	Aluminum	Male	1.265 (32.13)	0.910 (23.11)	0.840 (21.34)
16	12.4 - 18.0	1.10:1	1.05:1	0.20	M85/1-090 (RG-349/U)	M3922/70-020	Aluminum	Female	1.265 (32.13)	0.910 (23.11)	0.840 (21.34)
17	7.0 - 11.0	1.10:1	1.05:1	0.15	M85/1-155 (RG-320/U)	M3922/70-013	Copper	Male	1.350 (34.29)	0.970 (24.64)	0.950 (24.13)
18	7.0 - 11.0	1.10:1	1.05:1	0.15	M85/1-155 (RG-320/U)	M3922/70-013	Copper	Female	1.350 (34.29)	0.970 (24.64)	0.950 (24.13)
19	12.4 - 18.0	1.10:1	1.05:1	0.20	M85/1-089 (RG-91/U)	M3922/70-019	Copper	Male	1.265 (32.13)	0.910 (23.11)	0.840 (21.34)
20	12.4 - 18.0	1.10:1	1.05:1	0.20	M85/1-089 (RG-91/U)	M3922/70-019	Copper	Female	1.265 (32.13)	0.910 (23.11)	0.840 (21.34)

See footnotes at end of table.

TABLE I. Adapters, coaxial to waveguide (class 5 - SMA to waveguide) - Continued

Dash number	Frequency range (GHz)	VSWR over entire frequency range (max) 4/ 5/	VSWR over 50 percent frequency range (max) 4/ 5	RF insertion loss dB (max) 5/	Wave-guide housing 6/	Flange 7/	Wave-guide and flange material	Connector	Dimensions 1/ 2/ 3/		
									A (max)	B (max)	C (max)
21 8/	2.60 - 3.95	1.04:1	---	0.05	M85/4-017	M3922/75-06	Aluminum	Male	2.50 (63.5)	.913 (23.19)	1.53 (38.9)
22 8/	2.60 - 3.95	1.04:1	---	0.05	M85/4-017	M3922/75-06	Aluminum	Female	2.50 (63.5)	.913 (23.19)	1.53 (38.9)
23 8/	2.60 - 5.85	1.25:1	---	0.05	M85/4-007	M3922/75-02	Aluminum	Male	2.50 (63.5)	1.10 (27.9)	1.60 (40.6)
24 8/	2.60 - 5.85	1.25:1	---	0.05	M85/4-007	M3922/75-02	Aluminum	Female	2.50 (63.5)	1.10 (27.9)	1.60 (40.6)
25 8/	5.85 - 8.20	1.04:1	---	0.05	M85/4-008	M3922/75-04	Aluminum	Male	1.50 (38.1)	.88 (22.4)	1.13 (28.7)
26 8/	5.85 - 8.20	1.04:1	---	0.05	M85/4-008	M3922/75-04	Aluminum	Female	1.50 (38.1)	.88 (22.4)	1.13 (28.7)
27 8/	5.85 - 12.4	1.25:1	---	0.05	M85/4-008	M3922/75-04	Aluminum	Male	1.50 (38.1)	.88 (22.4)	1.13 (28.7)
28 8/	5.85 - 12.4	1.25:1	---	0.05	M85/4-008	M3922/75-04	Aluminum	Female	1.50 (38.1)	.88 (22.4)	1.13 (28.7)

1/ Dimensions are in inches.
2/ Metric equivalents are given for general information only and are based upon 1.00 inch = 25.4 mm.
3/ Metric equivalents are in parentheses.
4/ A larger attenuator pad may be used for VSWR test setup (see figure 1 of MIL-DTL-22641).
5/ VSWR and RF insertion loss may be measured by swept frequency techniques.
6/ The internal dimensions and material of the waveguide shall be in accordance with MIL-DTL-85.
7/ Flange material and flange mounting hole dimensions shall be in accordance with MIL-F-3922.
8/ Reduced height waveguides and flanges.

NOTE: Changes from previous issue. Marginal notations are not used in this revision to identify changes with respect to the previous issue due to the extent of the changes.

Custodians:
Army - CR
Navy - EC
Air Force - 11
DLA - CC

Review activities:
Army - MI
Navy - AS, MC, OS
Air Force - 99

Preparing activity:
DLA - CC

(Project 5985-1125)