MILITARY SPECIFICATION SHEET

ADAPTERS, COAXIAL TO WAVEGUIDE (CLASS III - 7/8 INCH), TYPES UG-405/U, UG-522/U, UG-1622/U, AND UG-1663/U

The complete requirements for procuring the adapters described herein shall consist of this document and the latest issue of MIL-A-22641.

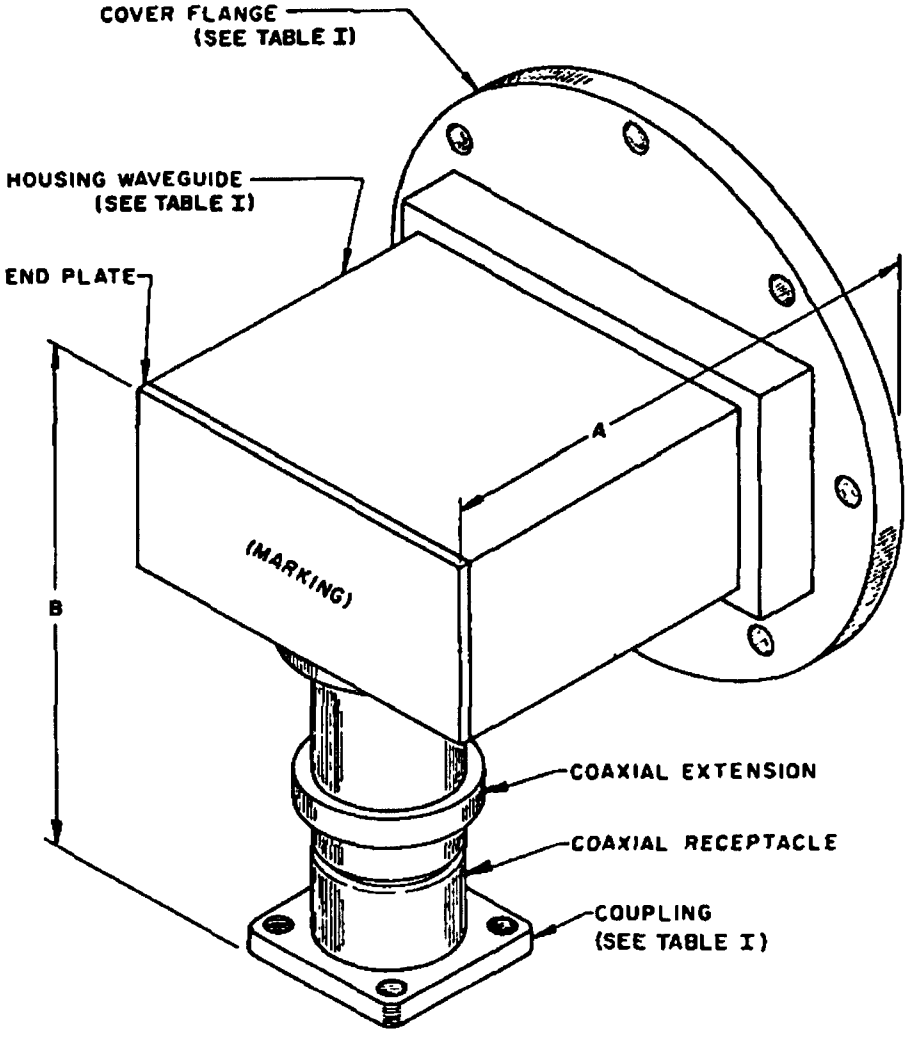

REQUIREMENTS:

Dimensions and configuration: See figure 1 and table I. The coaxial end shall be equivalent to standard female coupling UG-46/U or standard male coupling UG-45/U and shall be capable of properly mating with UG-45/U and UG-46/U, respectively, as specified (see table I). (Bureau of Ships drawings REA49330 and 49331.)

FSC 5985

VSWR: See table I. Frequency range: See table I.

TABLE I - Adapters, coaxial to waveguide (class III - 7/8 inch).

Part number	UG type	Housing waveguide	Cover flange 1/	A(max)	B(max)	Frequency range (mc)	VSWR over entire freq. range	VSWR over 50% freq. range	Coup-ling
M22641/17-01	UG-522/U	M85/1-039 RG-48/U	UG-53/U	3.500 (88.90)	5.000 (127.00)	2,600 3,950	1.3	1.25	M
M22641/17-02	UG-405/U	M85/1-039 RG-48/U	UG-53/U	3.500 (88.90)	4.250 (107.95)	2,600 3,950	1.3	1.25	F
M22641/17-03	UG-1662/U	M85/1-041 RG-75/U	UG-584/U	3.500 (88.90)	5.000 (127.00)	2,600 3,950	1.3	1.25	M
M22641/17-04	UG-1663/U	M85/1-041 RG-75/U	UG-584/U	3.500 (88.90)	4.250 (107.95)	2,600 3,950	1.3	1.25	F

1/ Cover flange in accordance with MIL-F-3922.

NOTES:

1. Dimensions are in inches.

2. Metric equivalents in parentheses are given for general information only and are based upon 1 inch = 25.4 mm to the nearest .01 mm.

Custodians:
Army - EL
Navy - SH
Air Force - 11

Review activities:
Army - EL, MI, MU
Navy - SH
Air Force - 11, 17, 85

User activities:
Army - MO
Navy - WP, MC
Air Force - None

Preparing activity:
Navy - SH
(Project 5985-0564)