MILITARY SPECIFICATION SHEET

POWER DIVIDER/COMBINERS, N-WAY, 0 DEGREES,
SMA CONNECTORS

This specification sheet is approved for use by all Departments and Agencies of the Department of Defense.

The complete requirements for procuring the power divider/combiners described herein shall consist of this document and the latest issue of specification MIL-P-23971.

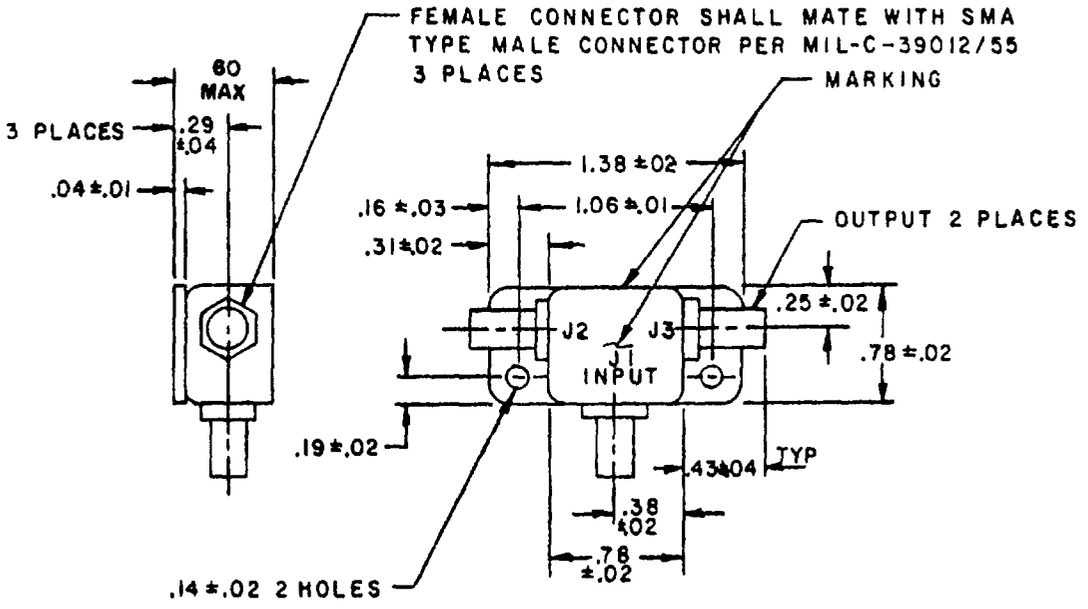

INCHES	MM	INCHES	MM
.01	.3	.29	7.4
.02	.5	.31	7.9
.03	.8	.38	9.7
.04	1.0	.43	10.9
.14	3.6	.50	12.7
.16	4.1	.78	19.8
.19	4.8	1.06	26.9
.25	6.4	1.38	35.1

NOTES:
1. Dimensions are in inches.
2. Metric equivalents are given for general information only and are based upon 1.00 inch = 25.4 mm

FIGURE 1. Dimensions and configuration, 2-way, dash number 01.

FSC 5985

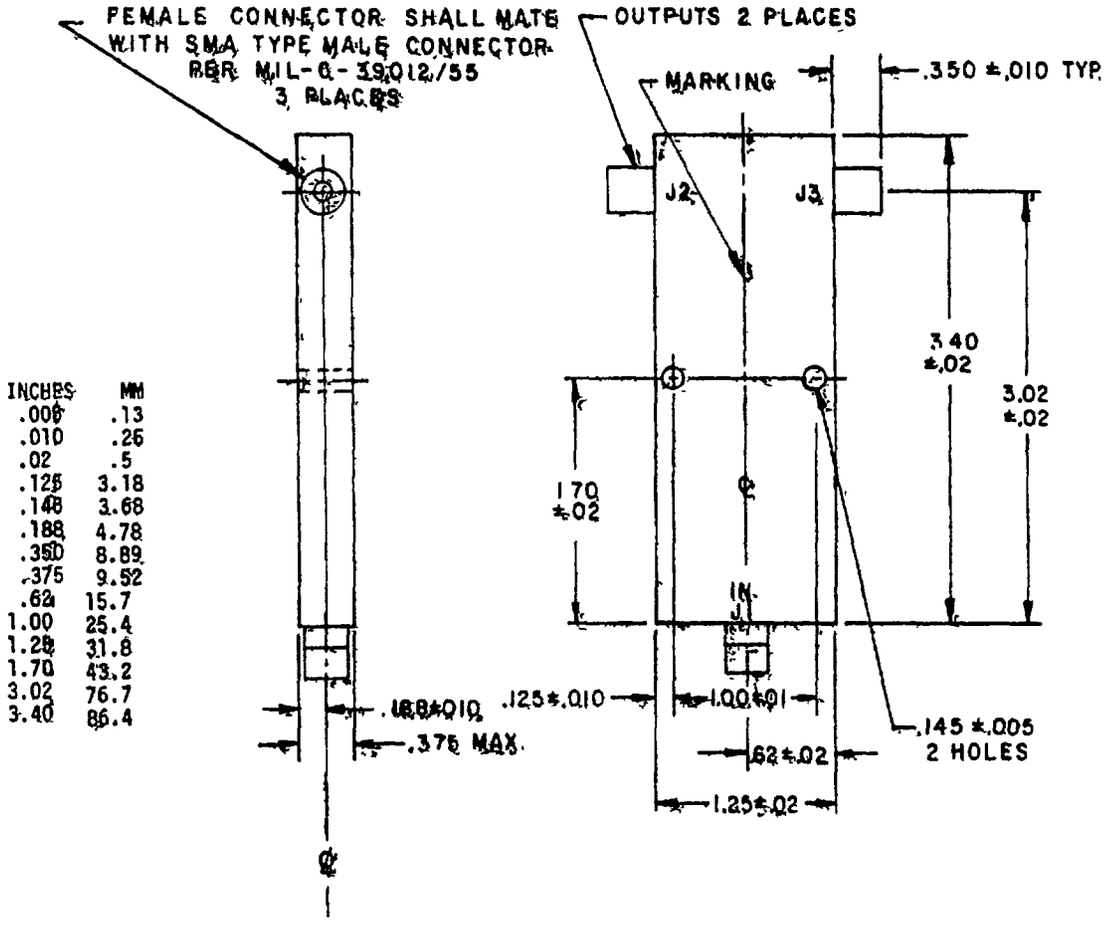

INCHES	MM
.005	.13
.010	.25
.02	.5
.125	3.18
.145	3.68
.188	4.78
.350	8.89
.375	9.52
.62	15.7
1.00	25.4
1.25	31.8
1.70	43.2
3.02	76.7
3.40	86.4

NOTES:
1. Dimensions are in inches.
2. Metric equivalents are given for general information only and are based upon 1.00 inch = 25.4 mm

FIGURE 2. Dimensions and configuration, 2-way, dash number 02.

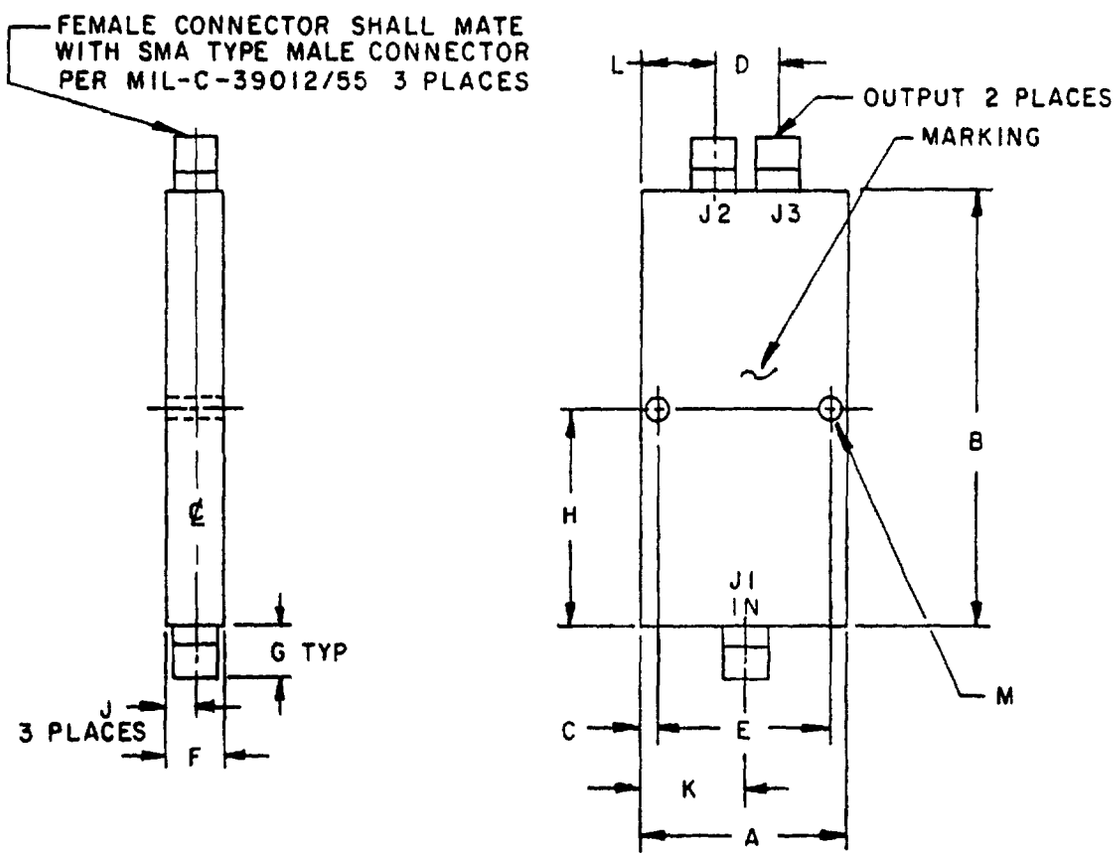

NOTES:
1. Dimensions are in inches.
2. Metric equivalents are given for general information only and are based upon 1.00 inch = 25.4 mm.

FIGURE 3. Dimensions and configuration, 2-way dash numbers 03 and 04.

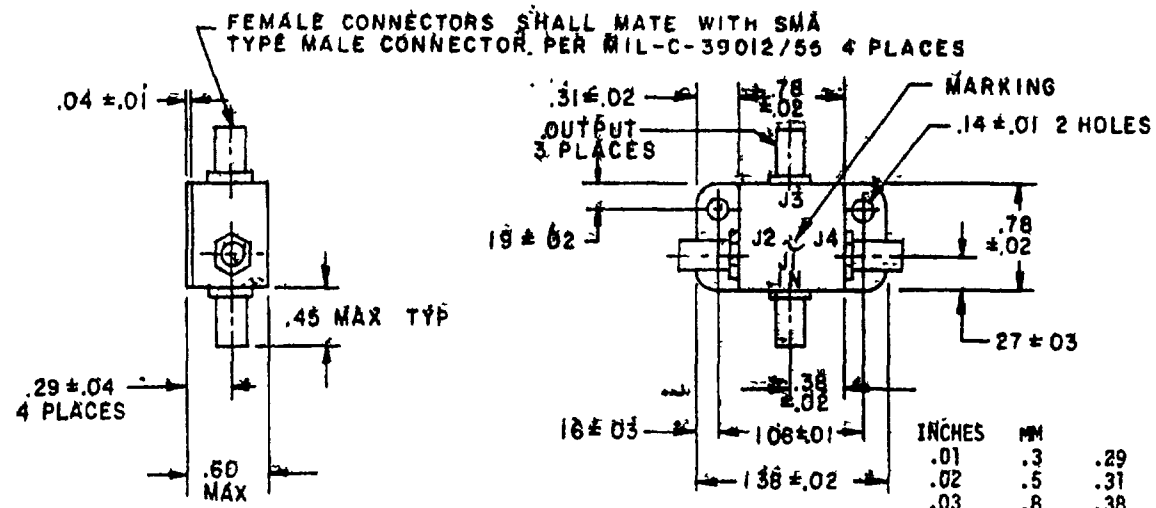

INCHES	MM		
.01	.3	.29	7.4
.02	.5	.31	7.9
.03	.8	.38	9.7
.04	1.0	.45	11.4
.14	3.6	.60	15.2
.16	4.1	.78	19.8
.19	4.8	1.06	26.9
.27	6.9	1.38	35.1

NOTES:
1. Dimensions are in inches.
2. Metric equivalents are given for general information only and are based upon 1.00 inch = 25.4 mm.

FIGURE 4. Dimensions and configuration, 3-way, dash number 05.

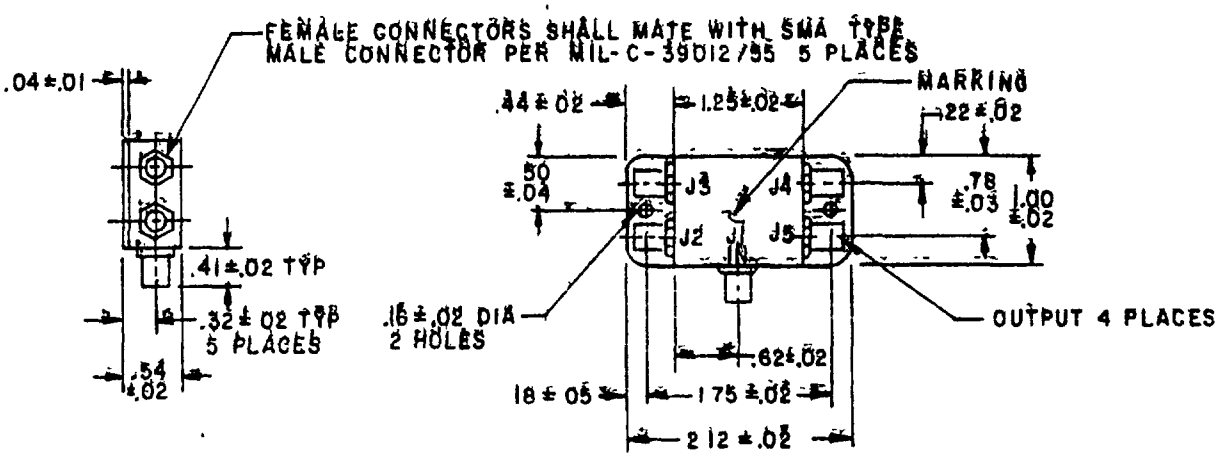

INCHES	MM	INCHES	MM	INCHES	MM	INCHES	MM
.01	.3	.16	4.1	.44	11.2	1.00	25.4
.02	.5	.18	4.6	.50	12.7	1.25	31.8
.03	.8	.22	5.6	.54	13.7	1.75	44.4
.04	1.0	.32	8.1	.62	15.7	2.12	53.8
.05	1.3	.41	10.4	.78	19.8		

NOTES:
1. Dimensions are in inches.
2. Metric equivalents are given for general information only and are based upon 1.00 inch = 25.4 mm.

FIGURE 5. Dimension and configuration, 4-way, dash numbers 06, 07, 08, 09, 10, and 11.

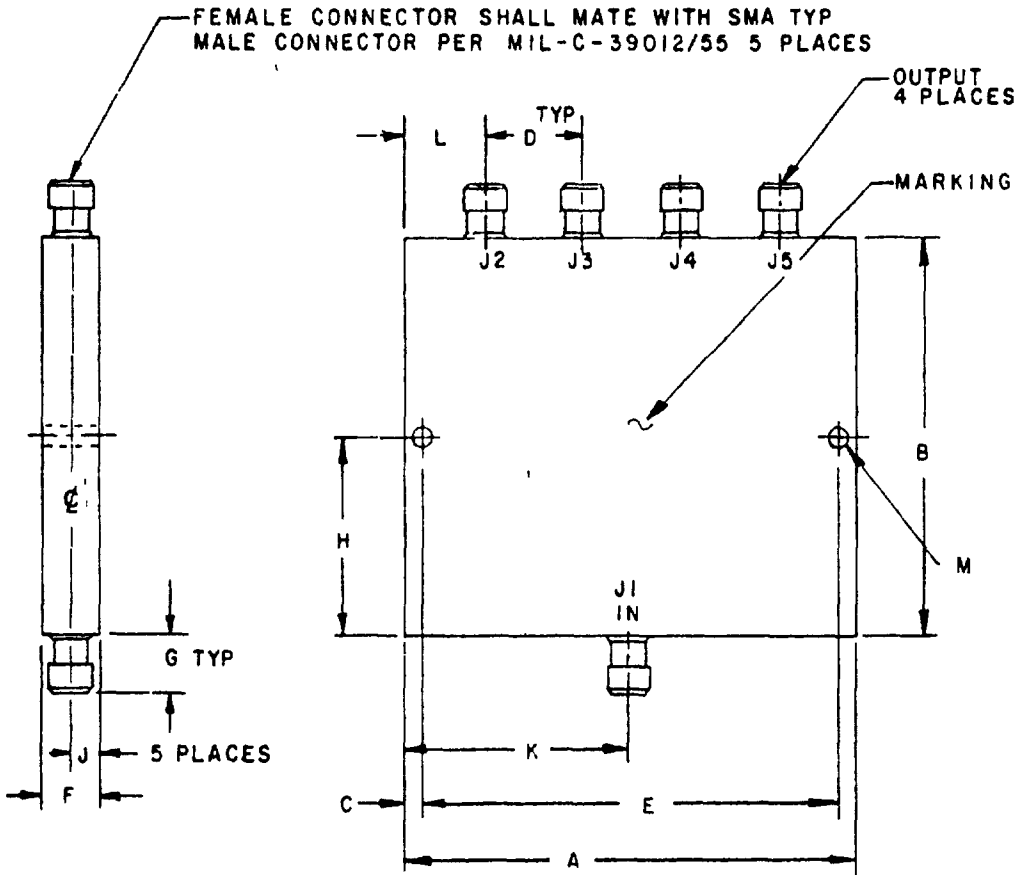

INCHES	MM	INCHES	MM
.005	.13	.55	14.0
.01	.3	.60	15.2
.02	.5	.70	17.8
.03	.8	.75	19.0
.125	3.18	1.20	30.5
.142	3.61	1.40	35.6
.145	3.68	1.60	40.6
.18	4.6	2.40	61.0
.35	8.9	2.55	64.8
.36	9.1	2.80	71.1
.37	9.4	2.85	72.4
.45	11.4	2.95	74.9
.50	12.7	3.20	81.3

NOTES
1. Dimensions are in inches.
2. Metric equivalents are given for general information only and are based upon 1.00 inch = 25.4 mm.

FIGURE 6. Dimensions and configurations , 4-way, dash numbers 12, 13, and 14.

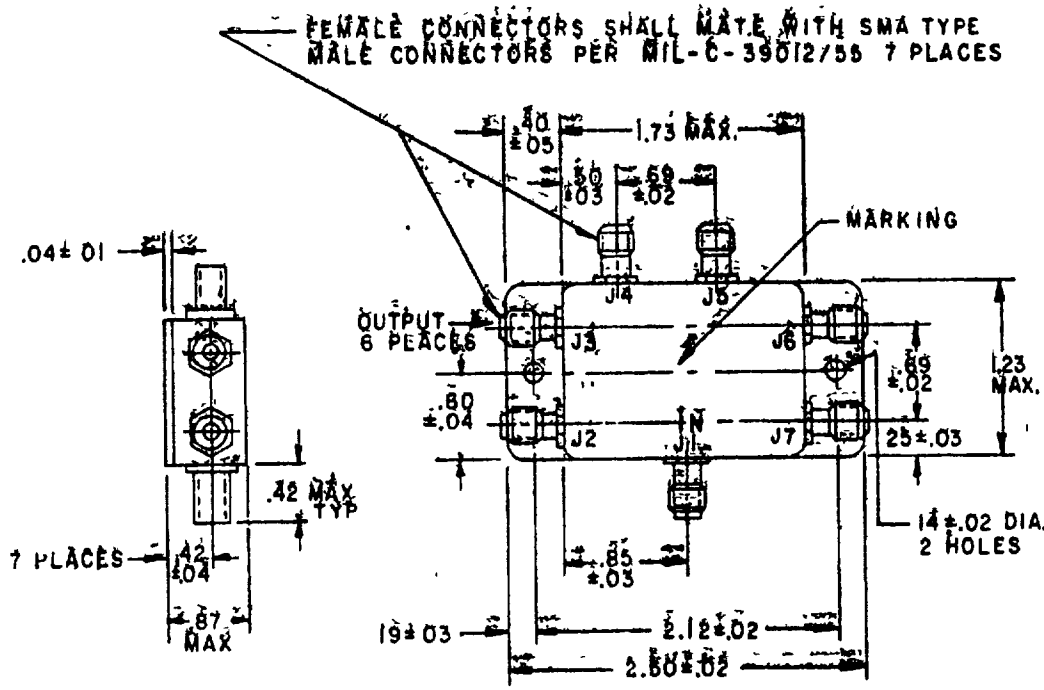

INCHES	MM	INCHES	MM
.01	.3	.50	12.7
.02	.5	.60	15.2
.03	.8	.69	17.5
.04	1.0	.85	21.6
.05	1.3	.87	22.1
.14	3.6	1.23	31.2
.19	4.8	1.73	43.9
.25	6.4	2.12	53.8
.40	10.2	2.50	63.5
.42	10.7		

NOTES:
1. Dimensions are in inches.
2. Metric equivalents are given for general information only and are based upon 1.00 inch = 25.4 mm.

FIGURE 7. Dimensions and configuration, 6-way, dash number 15.

Table I Dimensions

M23971/16-	A	B	C	D	E	F	G	H	J	K	L	M	Figure
03,04	1.45 ±.02	3.00 ±.02	.120 ±.030	.75 ±.02	1.20 ±.01	.37 ±.02	.35 ±.03	1.500 ±.020	.185 ±.010	.72 ±.02	.35 ±.02	.145 ±.005	3
12	3.20 ±.02	2.85 ±.02	.125 ±.030	.70 ±.02	2.95 ±.01	↓	↓	.142 ±.020	↓	1.60 ±.02	.55 ±.02	↓	6
13	↓	↓	↓	↓	↓	↓	↓	↓	↓	↓	↓	↓	6
14	2.80 ±.02	2.40 ±.02	↓	.60 ±.02	2.55 ± .01	.36 ±.02	↓	1.200 ±.020	.180 ±.010	1.40 ±.02	.50 ±.02	↓	6

INCHES	MM	INCHES	MM	INCHES	MM
.005	.13	.35	8.89	1.40	35.6
..01	.3	.36	9.14	1.45	36.8
.02	.5	.37	9.40	1.500	38.10
.020	.51	.50	12.7	1.60	40.6
.030	.76	.55	14.0	2.40	61.0
.120	3.05	.60	15.2	2.55	64.8
.125	3.17	.70	17.8	2.80	71.1
.142	3.61	.72	18.3	2.85	72.4
.145	3.68	.75	19.1	2.95	74.9
.180	4.57	1.20	30.5	3.00	76.2
.185	4.70	1.200	30.48	3.20	81.3

REQUIREMENTS:

Design and construction: See figures 1 through 7.

Case: O-ring seal.

Electrical characteristics: See table II.

Weight: See table II.

Ambient temperature: See table II.

Environmental requirements: See table III.

Part number: M23971/16– (dash number from table II).

TABLE II Electrical performance characteristics and physical requirements.

M23971/16	Impedance (ohms)	Frequency range GHz	Average coupling (dB)	VSWR max	Insertion loss max (dB)	Isolation min (dB)	Phase balance max (degree)	Amplitude balance (dB) max	Power level avg (W)	Power level pk (W)	Weight pounds (grams)	Ambient temperature Operating	Ambient temperature Storage	Figure
01	50	1-100 MHz	3.01 +.5 −.0	1.3:1	0 5	30	±1 0	±0.2	–	2	.062 (28)	−55° to +85°C	−65° to +85°C	1
02	50	1 0-2.0	3 + 2 −.0	1.25.1	0.3	20	±6 0	±0 4	–	.1	.17 (77 0)	0° to +71°C	0° to +71°C	2
03	50	1.0-2.0	3 +.2 −.0	1.25:1	0.3	20	±6 0	±0 4	–	.1	.17 (77.0)	0° to +71°C	0° to +71°C	3
04	50	1.0-4.0	3 +.2 − 0	1.7:1	0 40	22	±4.0	±0 2	1	1/	.25 (110.)	−35° to +105°C	−55° to +125°C	3
		4.0-8 0		1 6 1	0 80									
		8 0-12.0			1.20	16	±5 0							
		12.0-12.4			1.30									
05	50	10-100 MHz	4.77 + .5 −.0	1.3 1	0 5	30	±1 0	±0 2	–	5	.120 (55)	−55° to +85°C	−65° to +85°C	4
06	50	2-32 MHz	6. +.5 −.0	1.3:1	0 7	30	±1.0	±0.2	–	2	06 (27 0)	−55° to +72°C	−62° to +110°C	5
07	50	10-100 MHz	6 02 + 7 − 0	1.3 1	0 7	30	±1.0	±0 2	–	2	.06 (27.0)	−55° to +72°C	−62° to +110°C	5
08	50	20-200 MHz	6 +.5 − 0	1 3 1	0 7	30	±1 0	±0.2	–	2	.06 (27.0)	−55° to +72°C	−62° to +110°C	5
09	50	100-300 MHz	6 + 5 −.0	1 3.1	1 0	30	±1 0	±0 2	–	2	06 (27 0)	−55° to +72°C	−62° to +110°C	5
10	50	200-500 MHz	6. + 5 − 0	1 3 1	1 0	30	±1 0	±0 2	–	2	06 (27 0)	−55° to +72°C	−62° to +110°C	5

See notes at end of table

TABLE VII. Electrical performance characteristics and physical requirements – Continued.

M23971/16 –	Impedance (ohms)	Frequency range GHz	Average coupling (dB)	VSWR max	Insertion loss max (dB)	Isolation min (dB)	Phase balance max (degree)	Amplitude balance (dB) max	Power level avg (W)	Power level pk (W)	Weight pounds (grams)	Ambient temperature Operating	Ambient temperature Storage	Figure
11	50	250-500 MHz	6 + .5 − 0	1.3:1	1.0	30	±1.0	±0.2	–	2	.062 (28)	−54° to +71°C	−57° to +71°C	5
12	50	1-2	6 + .5 − 0	1.35:1	0.6	20	±6.0	±0.6	–	1	.37 (170)	0° to +71°C	0° to +71°C	6
13	50	1-2	6 + .9 − 0	1.35:1	0.6	20	±6.0	±0.6	3.16 2/		.36 (160)	0° to +71°C	0° to +71°C	6
14	50	2-4	6 + .5 − 0	1.35:1	0.6	18	±3.0	±0.3	.1	–	.360 (162)	−54° to +71°C	−57° to +71°C	6
15	50	10-100 MHz	7.8 + .7 − 0	1.3:1	1.0	30	±2.0	±0.2	2	–	.19 (160)	−46° to +63°C	−57° to +7°C	7

1/ Power level: 275 watt, peak, minimum for 100 nanoseconds.
2/ Power level: When used as a power combiner, the maximum power to each port is .0794 watts for coherent (equal amplitude, phase and frequency) signals. For 180° out of phase signals power rating is reduced to .02 watts per port

TABLE III Environmental tests: In accordance with MIL-P-23971 except:

M23971/16–	Vibration	Shock	Salt spray	Explosion	Acceleration
01, 05, 06 07, 08, 09 10	test condition B	4/	test condition A	4/	4/
04, 15	4/	test condition A	4/	4/	4/
11	4/	4/	4/	applicable	3/
13	4/	test condition I	test condition A	4/	4/
14	4/	test condition I	4/	4/	4/

3/The item shall be tested in accordance with method 212 of MIL-STD-202, test condition A with a 6G level The acceleration measured at any point of the component shall not exceed a 0.9G level. After the test, the VSWR, insertion loss, isolation, phase balance, and amplitude balance tests shall be performed in accordance with 4 7 4, 4 7.5, 4 7.6, 4 7 7, and 4.7.8, respectively.

4/Not applicable.

TABLE IV Supersession data

Part number M23971/16-	Supersedes M15370/13-
01	001
05	002
07	003

NOTE. Power dividers covered by this specification sheet are substituted for the following manufacturer's part number. This information in no way implies that the manufacturer's part is suitable as a substitute for the military part number.

Dash Number	Manufacturer's code	Manufacturer's part number	FSN
01	99971 12457	7541409-1 PDM-20-50	
02	05869 31597	712439-1 40265	
03	05869 31597	712439-2 4J0265	
04	12436 31597	6010207-001 40510	

Note – continued.

Dash Number	Manufacturer's code	Manufacturer's part number	FSN
05	99971 12457	7541409-2 PDM-30-55	
06	05869 12457	721723-1 PDM-40-17/12030	
07	99971 12457 05869 12457	7541409-3 PDM-40-55 721723-2 PDM-40-55/12030	
08	05869 12457 04660 12457	721723-3 PDM-40-110/12030 2600281-001 PDM-40-110	
09	05869 12457	721723-4 PDM-40-200/12030	
10	05869 12457	721723-5 PDM-40-350/12030	
11	32562 12457	340-1002-010 PDM-40-375	
12	05869 31597	712443-1 40275	
13	10001 31597	2939101-1 4A0275	
14	32562 31597	340-1001-010 40276	
15	49956 12457 32252	954530-1 PDM-60-55/23047 0-HJ-6-7010	

Custodians:
Army – ER
Navy – EC
Air Force – 85

Review activities:
Army –
Navy –
Air Force –
DLA – ES

User activities:
Army –
Navy – AS, OS, MC
Air Force –

Preparing activity:
Navy – EC

Agent:
DLA – ES

(Project 5985-0902)

STANDARDIZATION DOCUMENT IMPROVEMENT PROPOSAL

OMB Approval
No 22-R255

INSTRUCTIONS· The purpose of this form is to solicit beneficial comments which will help achieve procurement of suitable products at reasonable cost and minimum delay, or will otherwise enhance use of the document. DoD contractors, government activities, or manufacturers/vendors who are prospective suppliers of the product are invited to submit comments to the government. Fold on lines on reverse side, staple in corner, and send to preparing activity. Comments submitted on this form do not constitute or imply authorization to waive any portion of the referenced document(s) or to amend contractual requirements Attach any pertinent data which may be of use in improving this document. If there are additional papers, attach to form and place both in an envelope addressed to preparing activity.

DOCUMENT IDENTIFIER AND TITLE Mil-P-23971/16

NAME OF ORGANIZATION AND ADDRESS

CONTRACT NUMBER

MATERIAL PROCURED UNDER A

☐ DIRECT GOVERNMENT CONTRACT ☐ SUBCONTRACT

1 HAS ANY PART OF THE DOCUMENT CREATED PROBLEMS OR REQUIRED INTERPRETATION IN PROCUREMENT USE?

A. GIVE PARAGRAPH NUMBER AND WORDING

B RECOMMENDATIONS FOR CORRECTING THE DEFICIENCIES

2 COMMENTS ON ANY DOCUMENT REQUIREMENT CONSIDERED TOO RIGID

3. IS THE DOCUMENT RESTRICTIVE?

☐ YES ☐ NO *(If "Yes", in what way?)*

4. REMARKS

SUBMITTED BY *(Printed or typed name and address - Optional)*

TELEPHONE NO

DATE

DD FORM 1 JAN 72 1426

REPLACES EDITION OF 1 JAN 66 WHICH MAY BE USED

S/N 0102-014-1802

FOLD

DEPARTMENT OF THE NAVY
NAVAL ELECTRONIC SYSTEMS COMMAND
WASHINGTON, D.C. 20360

OFFICIAL BUSINESS
PENALTY FOR PRIVATE USE $300

POSTAGE AND FEES PAID
NAVY DEPARTMENT
DOD 316

COMMANDER
NAVAL ELECTRONIC SYSTEMS COMMAND
DEFENSE STANDARDIZATION PROGRAM BRANCH
DEPARTMENT OF THE NAVY
WASHINGTON, D.C. 20360

FOLD