MILITARY SPECIFICATION SHEET

SHIELD, ELECTRON TUBE, HEAT DISSIPATING, OCTAL, T11 (SPLIT SHELL)

The complete requirements for procuring the shield described herein shall consist of this document and the latest issue of Specification MIL-S-24251.

This specification is mandatory for use by all Departments and Agencies of the Department of Defense.

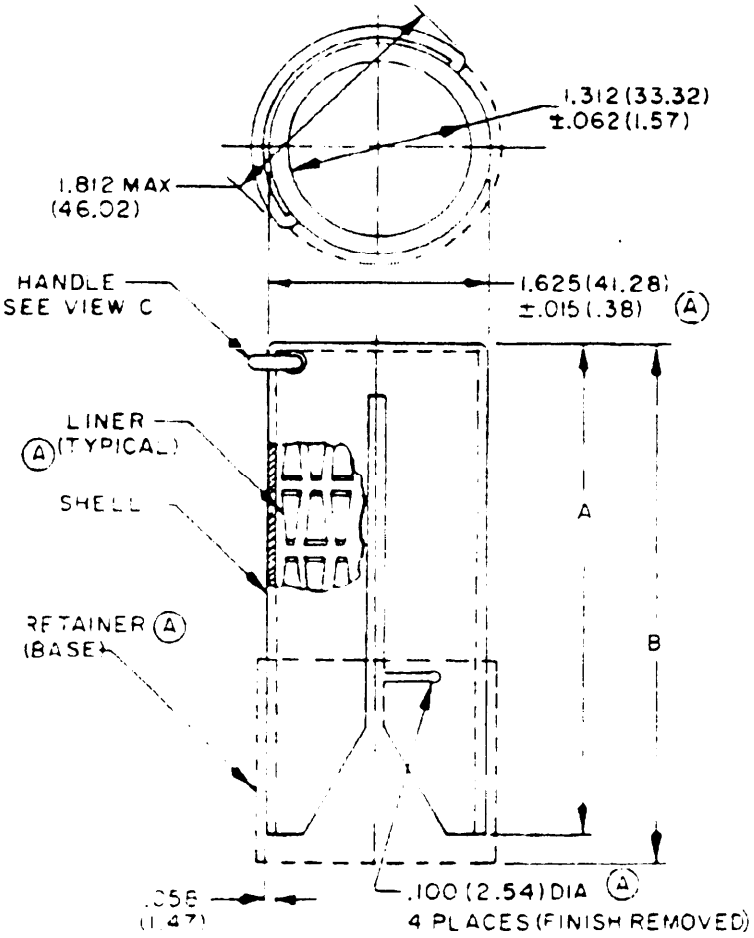

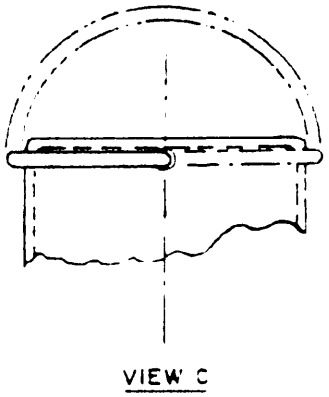

(A) denotes changes

Characteristics.

Dash no.	Heat dissipation temp.reduction in °C (minimum)	A ±.062 (1.57)	B max	Weight grams max	Tube envelope type T11 length	Use with retainer	Tube socket ref.
1	20	2.688(68.28)	2.938(74.63)	47	2.937(74.63)	M24251/10-1	MIL-S-12883 1
2	20	3.062(77.77)	3.312(84.12)	50	3.312(84.12)		
3	20	3.562(90.47)	3.812(96.82)	55	3.687(93.68)		
4	20	4.125(104.78)	4.372(111.13)	70	4.062(103.17)		

NOTES:
1. All dimensions are in inches.
2. Millimeters are in parentheses.
3. Metric equivalents (to the nearest .01 mm) are given for general information only and are based upon 1 inch = 25.4 mm.
4. (A) Unless otherwise specified, tolerance is 2 places ±.010 (.25 mm); 3 places ±.005 (.13 mm).
5. MIL-S-24251/9 (shield) was formerly MS24272 (USAF), 8 June 1961.

REQUIREMENTS:
The shield, locking mechanism, liner, and other parts shall be designed to meet the requirements of MIL-S-24251, and to fit the tube envelope and retainer (base) specified in table.

Dimensions and configuration: See figure and table.

Material:
Handle-Beryllium copper wire, QQ-C-530.
Liner-Beryllium copper, QQ-C-533.
Shell-Aluminum, WW-T-700/6, temper T6.

Heat treatment:
Liner-Heat treat full hard.

Finish:
Handle-
Henderlube 502A8 or equal.
Liner-
Henderlube 502A8 or equal.
Shell-Anodize, MIL-A-8625 and Henderlube 502A8 or equal.

Installation force shall not exceed 20 pounds.

Engaging torque: 20 pound-inches maximum.

The part number consists of the basic number of this specification sheet, preceded by the letter "M", and a dash number taken from table.

Example:

M24251/9-1

Basic document number — Dash number from table

Custodians:
Army - EL
Navy - EC
Air Force - 11

Review activities:
Army - EL
Navy -
Air Force - 11, 17, 85
DSA - ES

User activities:
Army - MU
Navy - MC, CG
Air Force - 19

Preparing activity:
Navy - EC

(Project 5960-2313-10)