MILITARY SPECIFICATION SHEET

SWITCH, MULTISTATION, PUSHBUTTON, ILLUMINATED MATRIX ARRANGEMENT, SUNLIGHT READABLE, 4 LAMP, PLUG-IN MODULE, STYLE SM12L1

This specification is approved for use by the Space and Naval Warfare Systems Command, Department of the Navy, and is available for use by all Departments and Agencies of the Department of Defense.

The requirements for acquiring the product described herein shall consist of this specification sheet and the issue of the following specification listed in that issue of the Department of Defense Index of Specifications and Standards (DODISS) specified in the solicitation: MIL-S-24317.

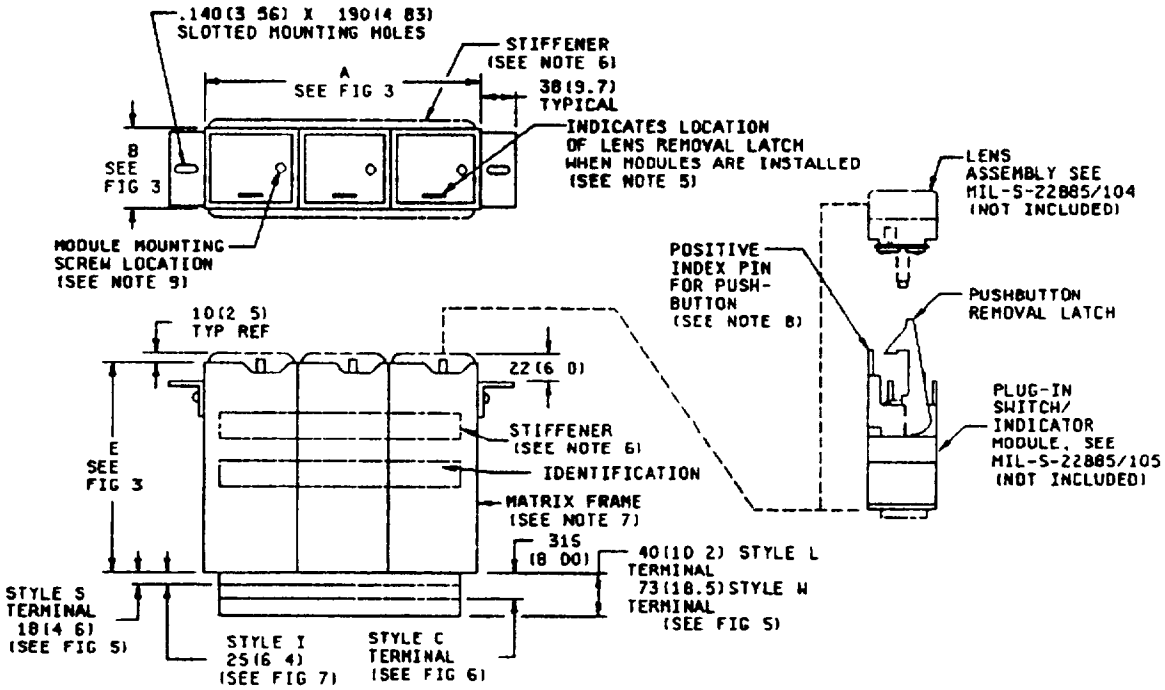

FIGURE 1 Matrix frame assembly, rear mount

(A) denotes changes

DISTRIBUTION STATEMENT A Approved for public release, distribution is unlimited

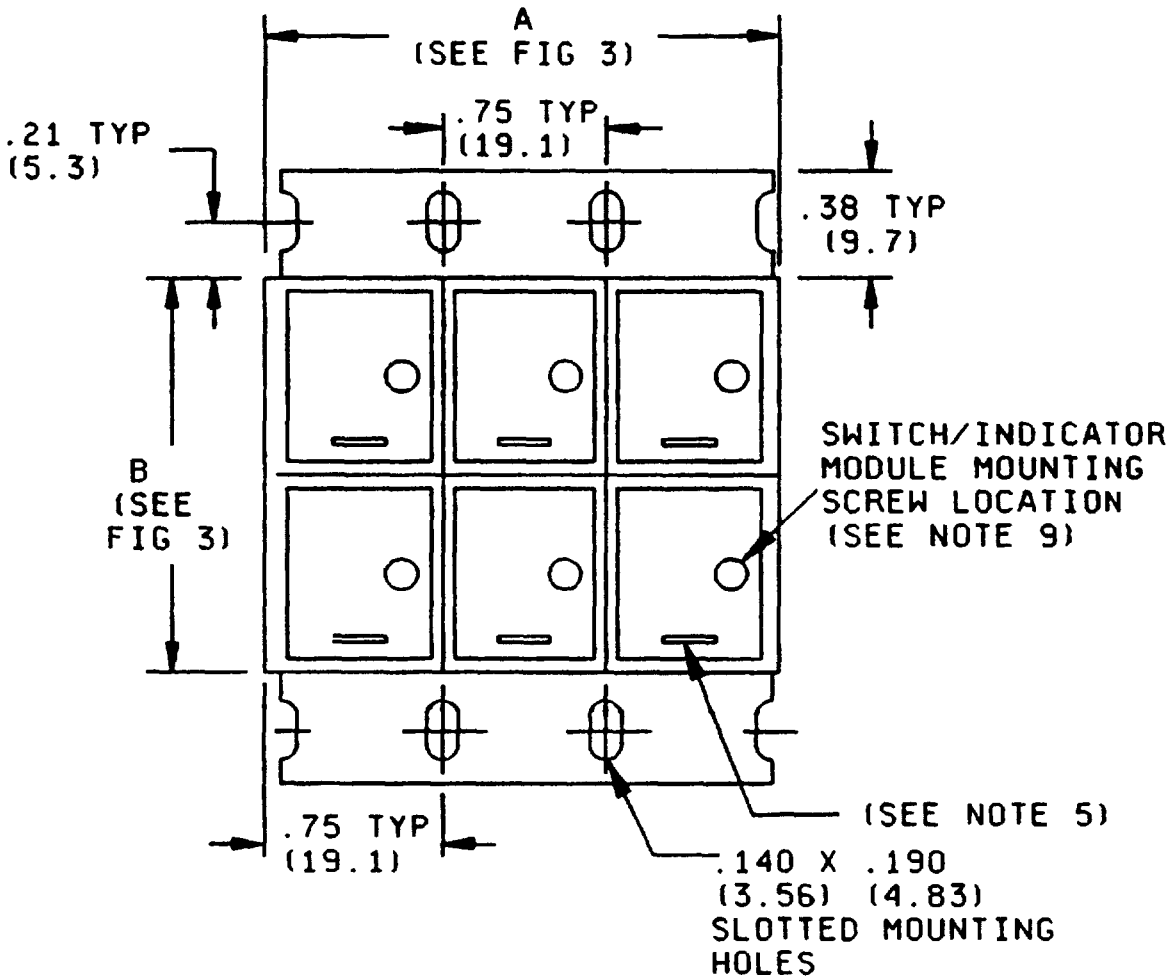

HORIZONTAL FLANGE (6 STATION EXAMPLE SHOWN)

FIGURE 1 Matrix frame assembly, rear mount - Continued

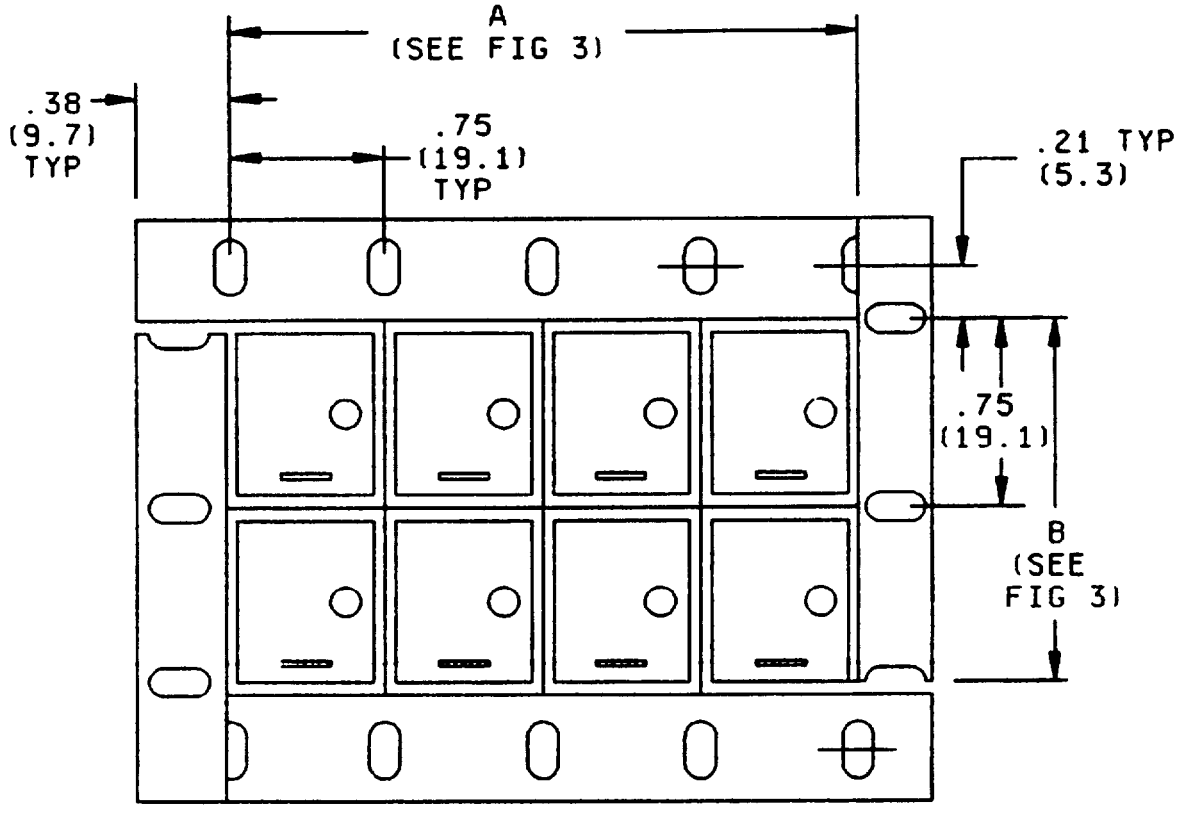

FOUR FLANGE (EIGHT STATION EXAMPLE SHOWN)

NOTES

1 Dimensions are in inches. Metric equivalents are in parentheses and are given for general information only.
2. Unless otherwise specified, tolerances are ±.015 (38 mm) for three place decimals and ±.03 (.76 mm) for two place decimals.
3. For matrix and panel cutout dimensions, see figure 3.
4. Design configuration is optional within envelope dimensions shown
5 To remove pushbutton, move latch to right.
6 Single rows or columns of seven or more stations and with rear mounting flanges will be furnished with two stiffener straps of aluminum alloy, .06 (1 52) thick x 0.5 (12.70) wide (styles S, W, L and C).
7 All housings are constructed to accept a captive pushbutton lens assembly Therefore, the housing and module assembly can be installed and the captive pushbutton option can be added or removed at any time
8 Index post provided prevents incorrect insertion of pushbutton into switch module
9 Module mounting screw is provided with MIL-S-22885/105 switch module

FIGURE 1 Matrix frame assembly, rear mount - Continued.

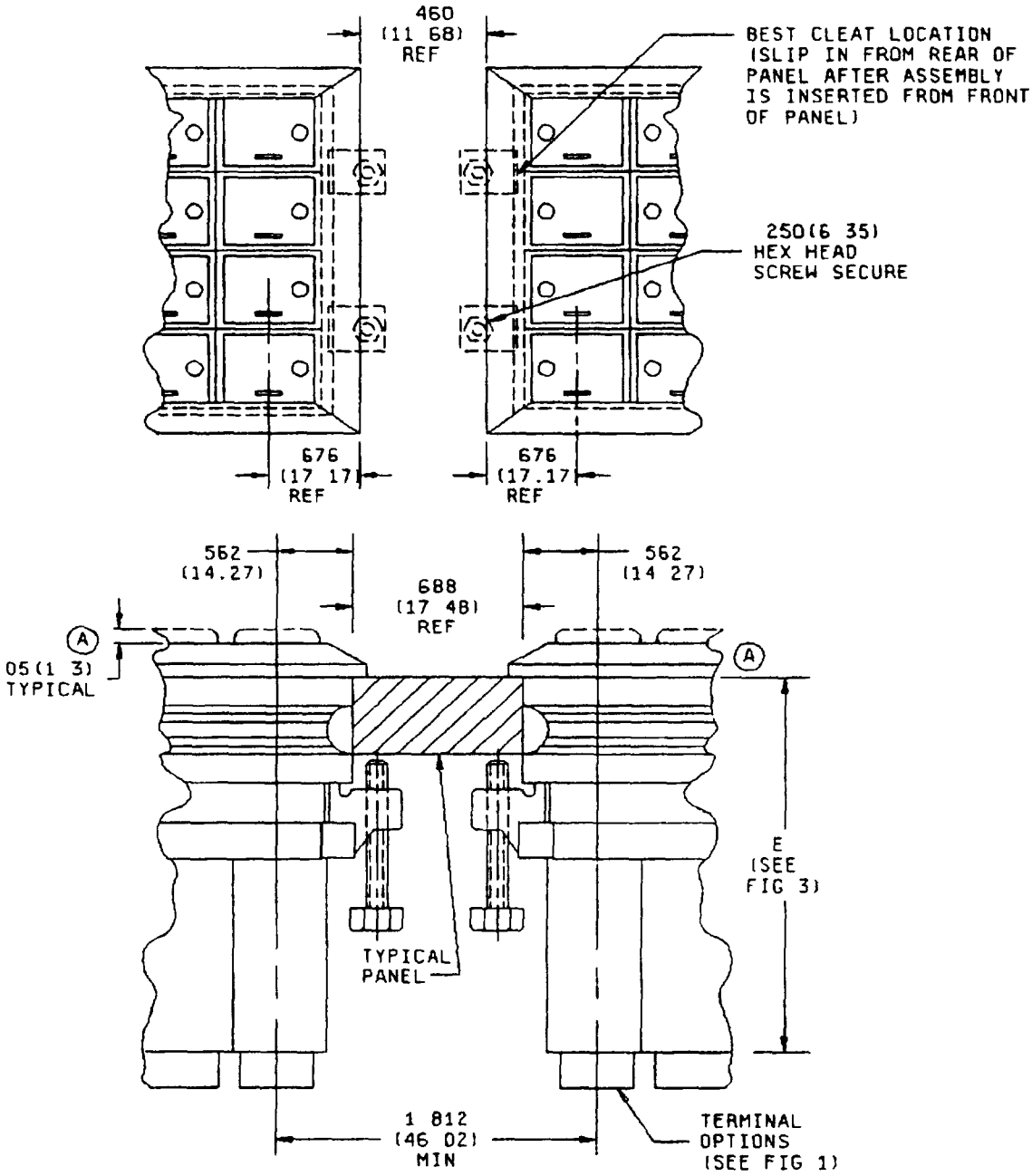

FIGURE 2 Matrix frame assembly - dress bezel mount.

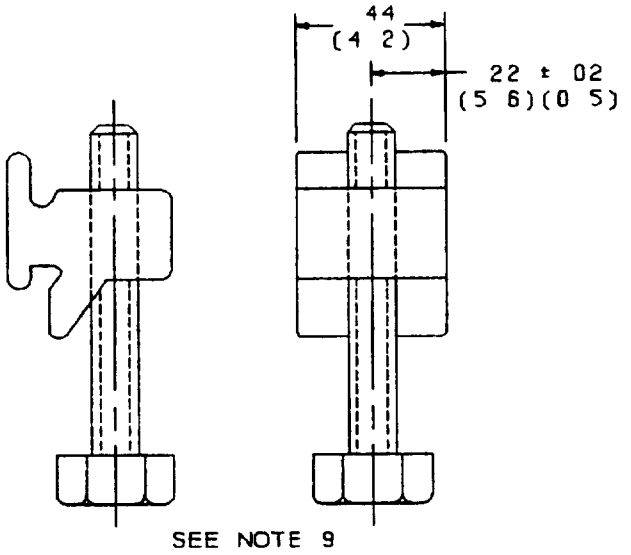

DRESS BEZEL MOUNTING CLEAT ASSEMBLY, PIN M24317/12-721

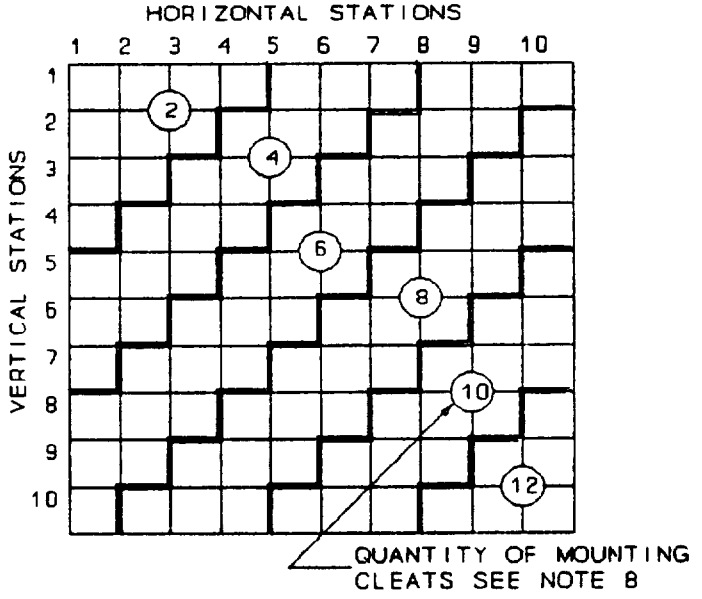

RECOMMENDED NUMBER OF MOUNTING
CLEATS FOR MATRIX SELECTED

FIGURE 2. Matrix frame assembly - dress bezel mount - Continued.

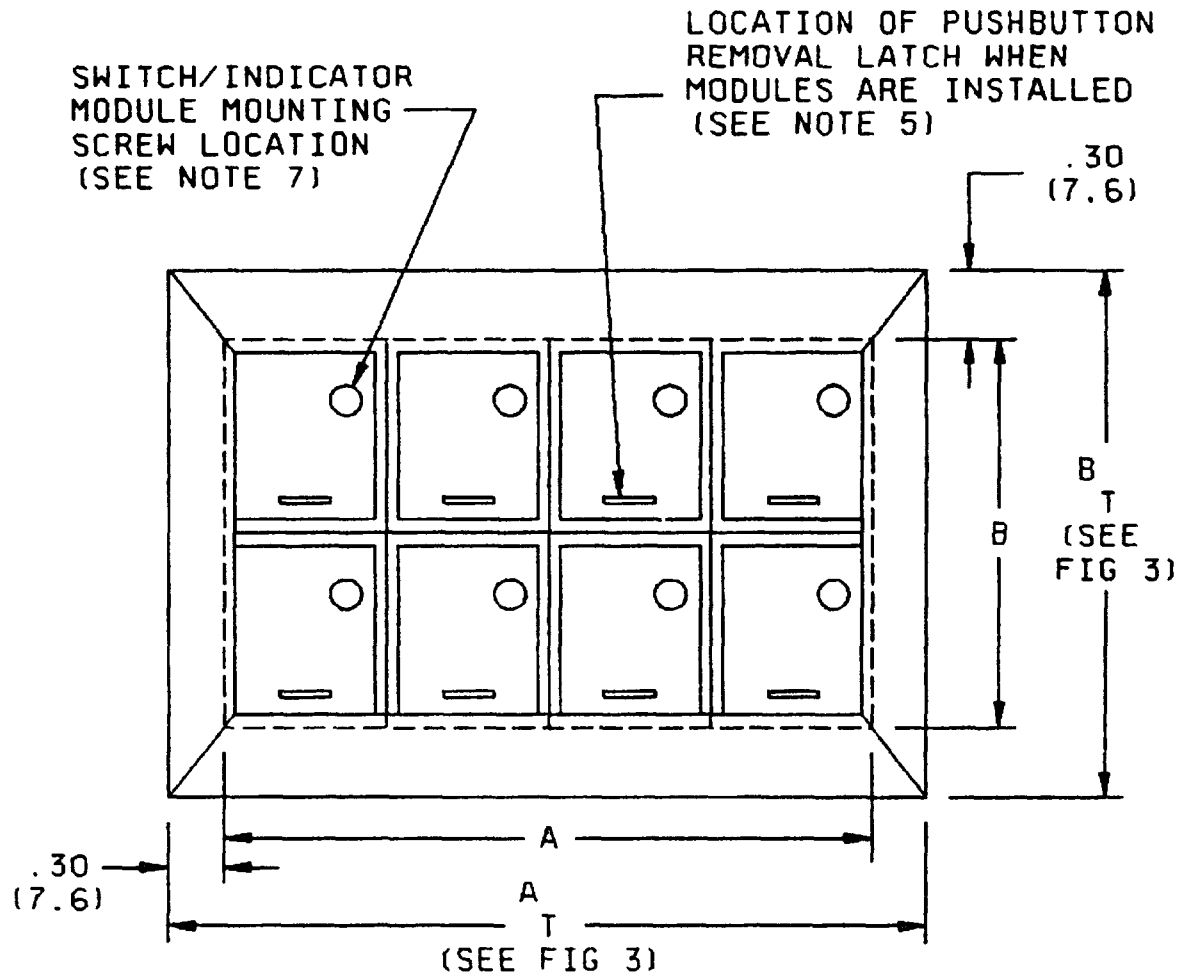

NOTES.

1 Dimensions are in inches. Metric equivalents are in parentheses and are given for general information only.
2. Unless otherwise specified, tolerances are ±.015 (.38 mm) for three place decimals and ±.03 (76 mm) for two place decimals
3. For matrix and panel cutout dimensions, see figure 3
4 Design configuration is optional within envelope dimensions shown
5. To remove pushbutton, move latch to right
6 All housings are constructed to accept a captive pushbutton lens assembly Therefore, the housing and module assembly can be installed and the captive pushbutton option can be added or removed at any time
7 Module mounting screw is provided with MIL-S-22885/105 switch module
8 The recommended number of mounting cleat assemblies, plus one extra, shall be provided with each matrix frame
9 The recommended tightening torque for mounting cleat screws is 7 inch-pounds (79 N·m)

FIGURE 2. Matrix frame assembly - dress bezel mount - Continued

	Style			
	All	Dress bezel		Rear mount
Number of units per side	Matrix dimension A or B ±.015 (.38)	Cutout dimension C or D +.030 (.76) -.000 (.00)	A_T or B_T (ref) overall flange	Cutout dimension C or D +.030 (.76) -.000 (.00)
1	.755 (19.18)	1.124 (28 55)	1.352 (34 34)	.755 (19.18)
2	1.510 (38.35)	1.879 (47.73)	2.107 (53.52)	1.530 (38.86)
Ⓐ 3	2.265 (57 53)	2 634 (66 90)	2 862 (72.69)	2.285 (58 04)
4	3.020 (76.71)	3.389 (86.08)	3.617 (91.87)	3.040 (77.22)
5	3.775 (95.89)	4 144 (105.26)	4.372 (111 05)	3.795 (96.39)
6	4.530 (115.06)	4 899 (124.43)	5.127 (130.23)	4 550 (115.57)
"N"	.755 (19 18) x N	Matrix dimension plus .369 (9.37)	Matrix dimension plus 579 (14.71)	.755 (19.18) x N ±.02 (51)

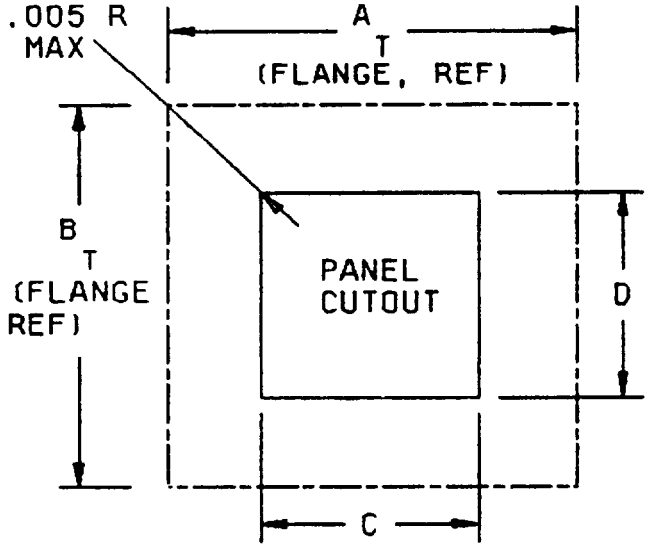

Matrix dimension E (see figures 1 and 2)	Application	Terminal style
2 46 (62 48)	Illuminated switch	S, W, L, C
0 94 (23 88)	Indicator light only	I

NOTE Dimensions are in inches Metric equivalents are in parentheses and are given for information only

FIGURE 3 Matrix and panel cutout dimensions

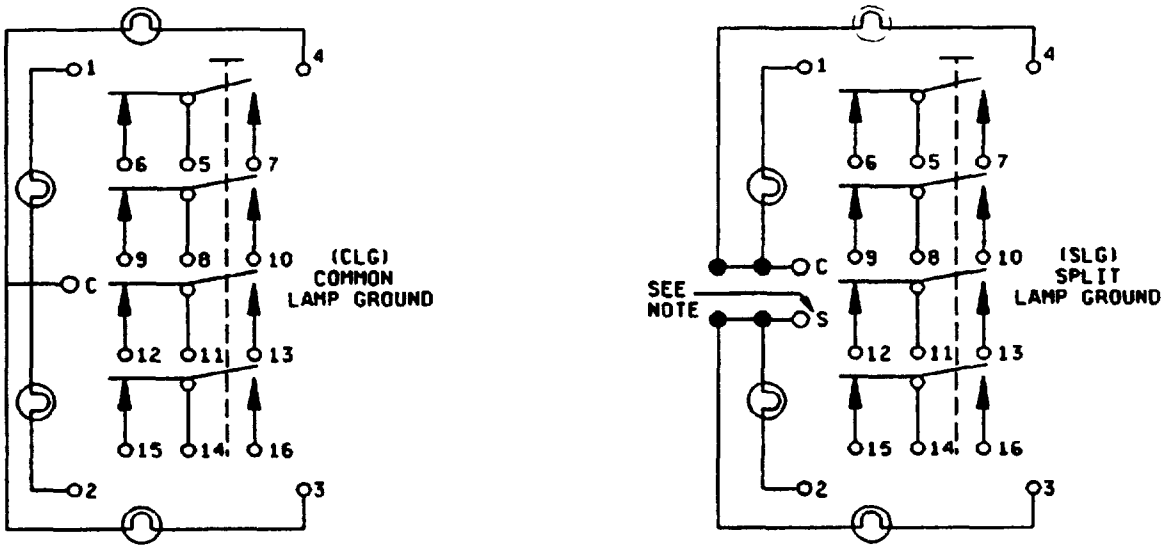

NOTE: On SLG circuit, terminal identification for style C is shown For styles S, W, L and I, terminal "S" is changed to terminal "B"

FIGURE 4. Lamp circuit schematics

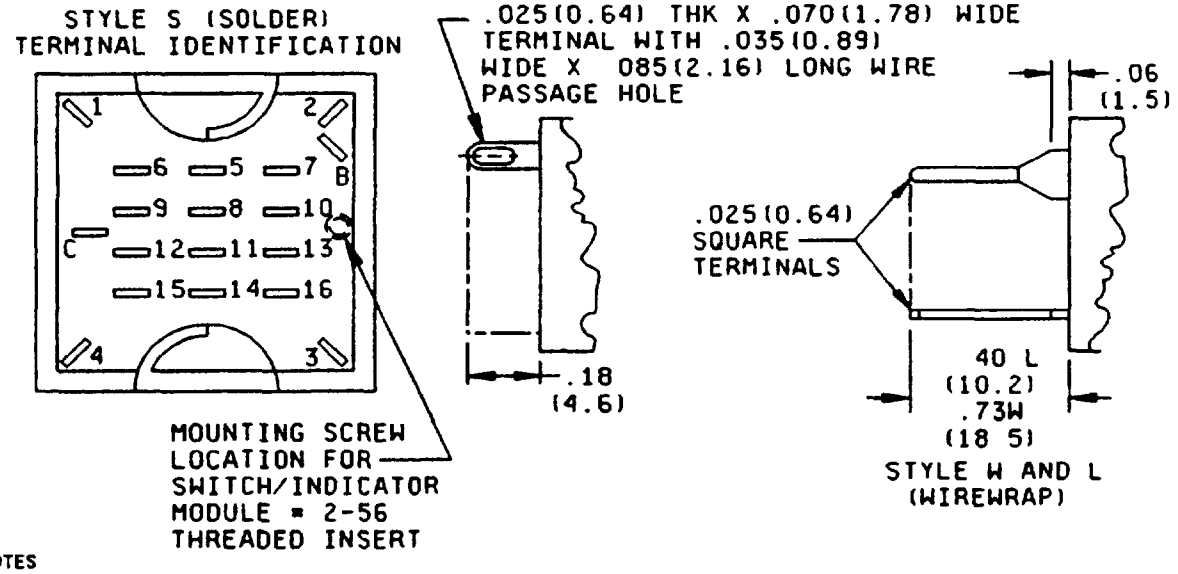

NOTES

1 Dimensions are in inches. Metric equivalents are in parentheses and are given for general information only.

2 Unless otherwise specified, tolerances are ±.015 (38 mm) for three place decimals and ± 03 (.76 mm) for two place decimals.

FIGURE 5. Receptacles, solder terminal (style S) and wirewrap terminals (styles W and L)

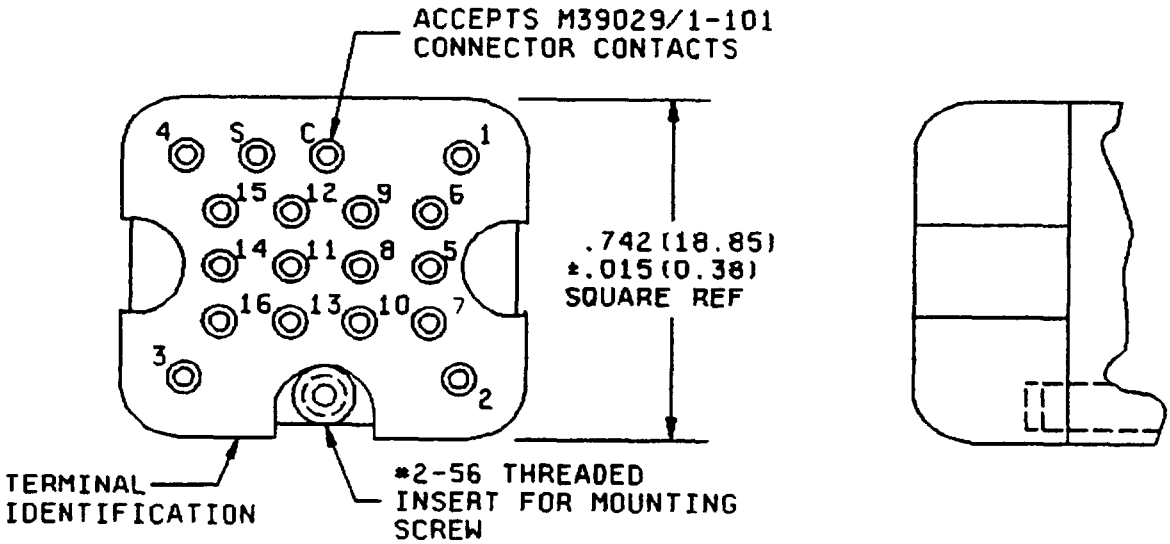

NOTE: Dimensions are in inches Metric equivalents are in parentheses and are given for general information only

FIGURE 6. Receptacle, male crimp pin, style C

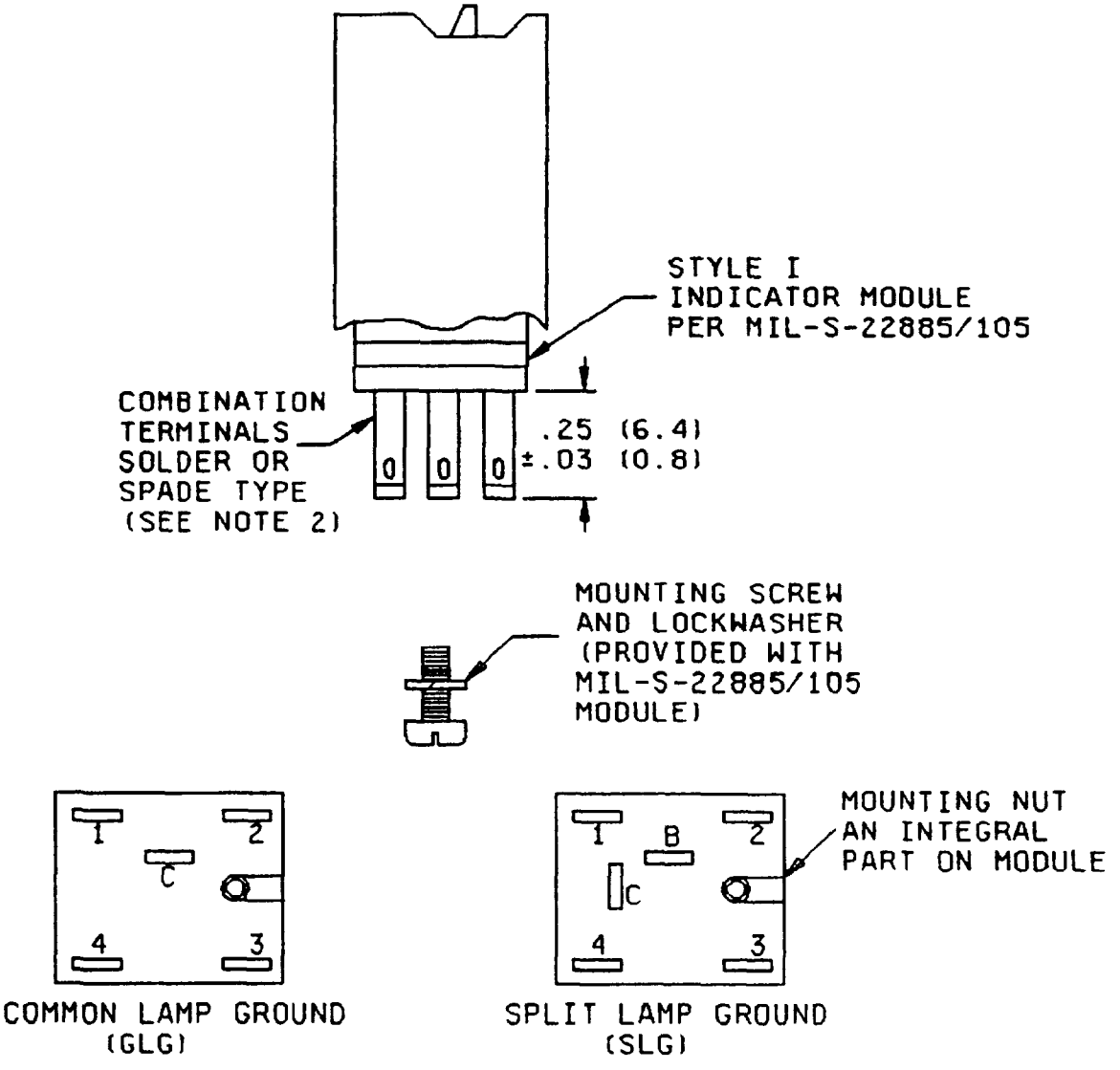

TERMINAL ARRANGEMENT

NOTES:

1. Dimensions are in inches. Metric equivalents are in parentheses and are given for general information only.
2. Style I housings do not include plug-in type receptacle for MIL-S-22885/105 module. Wires are soldered directly to module terminals.

FIGURE 7 Style I solder/spade termination - indicator light only function

REQUIREMENTS

Dimensions and configurations See figures 1 through 7

Complete multistation switch assembly shall consist of.

a Multistation matrix frame (see table III for part numbers) Dress bezel matrix frame includes correct number of mounting cleat assemblies plus one extra.

b Switch indicator modules. Acquire separately in accordance with MIL-S-22885/105

c Pushbuttons Acquire separately in accordance with MIL-S-22885/104.

d Lamps (T-1 midget flange base, .15 MSCP) Pushbutton accommodates 4 lamps - acquire separately.

Indication characteristic L (Illuminated)

Enclosure design. 1 (Unsealed).

Material

Matrix frame finish:

Without EMI/RFI shielding. Finished black in accordance with MIL-A-8625

With EMI/RFI shielding Chemical film in accordance with MIL-C-5541.

Replaceable switch/indicator module: See MIL-S-22885/105

Pushbutton See MIL-S-22885/104.

Terminal sealing grommet (applicable to style C)· Silicone rubber.

Common termination system (applicable to style C switches):

Shall accept M39029/1-101 connector contacts

Shall accept MS27488-20 end seal plugs

Shall seal on smooth wire insulations of .038(97 mm) to 083 (2.11 mm) diameter

Installation/removal tool: M81969/14-02

Switch function Independent

Color and luminance In accordance with MIL-S-22885/104

Switch actuation

Actuation force: 3.5 ±1 pounds

Release force 0.4 pound minimum.

Actuator travel· .20 inch nominal

Simultaneity· Not applicable

Thermal shock. Tested in accordance with method 107 of MIL-STD-202, test condition letter A (-55°C to +85°C)

Vibration, high frequency. Tested in accordance with method 204 of MIL-STD-202, test condition letter B (10-2,000 Hz)

Shock Tested in accordance with method 213 of MIL-STD-202, test condition letter A (50 g, half sine).

Terminal strength:

Common termination system (style C): Using crimping tool M22520/1-01 and positioner M22520/1-02 to install connector contact on wire, and insertion/extraction tool M81969/14-02, the crimped wire contact shall be inserted and extracted ten times The insertion and extraction force shall not exceed 10 pounds The contact shall again be inserted, and must hold axial load of twenty pounds minimum for 10 seconds Two terminals shall be tested

Dielectric withstanding voltage: Current flow shall not exceed 100 µA.

Sea level: 1,056 V rms.

70,000 ft. 450 V rms.

Torque strength of plunger Not applicable

Electrical endurance: See table I for test loads. Low level life test and requirement of MIL-S-22885 is applicable All lamps shall be energized at maximum rated voltage during endurance testing.

TABLE I. Electrical ratings

Load	Sea level and 70,000 ft 28 V dc and 115 V ac	Sea level 30 millivolts 1/
	Amperes	Amperes
Resistive	2	.01
Inductive	1	---
Lamp	75	---

1/ Maximum dc or peak ac Low level life test and requirement in accordance with MIL-S-22885 50,000 cycles, operating temperatures -55°C to +85°C

Weight, approximate (per station)

Two or four flanges, styles S, W, L and C 2 ounces

Dress bezel, styles S, W, L and C 2 1 ounces

Two or four flanges, style I 1.5 ounces.

Dress bezel, style I· 1 6 ounces

EMI/RFI shielding· Requirement and test in accordance with MIL-S-22885/103

Sunlight readability. Requirement and test in accordance with MIL-S-22885/104.

Part or Identifying Number (PIN): M24317/12- (dash number from table III)

Qualification inspection: All applicants for qualification approval shall demonstrate that each of their items conforms to all the requirements specified in the applicable documents, singularly and in combination with all other, previously qualified items, regardless of manufacturer When similar multistation switches are qualified to MIL-S-24317/9 and similar single station switches are qualified to MIL-S-22885/103, qualification and group C inspection shall be in accordance with table III.

Extent of qualification: The multistation switch/indicator assembly to be used for qualification inspection shall be the 3-station unit (1 X 3 matrix). Qualification of the 3-station units shall qualify all multistation units up to and including the 20-station unit. The 3-station units shall contain the following items:

Item	PIN	Description	Quantity
1	M24317/12-223	1 x 3 matrix frame (EMI/RFI shielded, dress bezel)	1
2	M22885/105-009	2PDT momentary switch module	1
3	M22885/105-011	4PDT alternate switch module	1
4	M22885/105-003	Indicator module	1
5	M22885/104-001	Pushbutton (color and legend optional)	3
6	MS24515-718	Lamp, T-1 midget flange base	12

TABLE II. Qualification inspection (group submission).

Assembly	Qualification inspection table of MIL-S-24317		Extent of approval
	Group	Number of sample units	
1 x 3 Matrix	I	8	All 3/
	II	4 from group I	
	III 1/	2 from group II 2/	

1/ Dielectric withstanding voltage after salt spray not applicable.
2/ Sample shall be subjected to EMI/RFI test of MIL-S-22885/103.
3/ Qualification will be extended to each applicable style (S, L, W, C or I) previously qualified to MIL-S-22885/103.

Quality conformance inspection:

Group B inspection

EMI/RFI shielding: Only positive grounding test need be performed

Group A inspection Do not exceed 6 V dc or peak ac, 10 milliamperes during group A inspection

TABLE III Matrix frame dash numbers

Dash numbers										Number of stations "N"	Mounting style 1/
Style											
C		S		W		L		I (indicator only)			
EMI/RFI shield		EMI/RFI shield		EMI/RFI shield		EMI/RFI shield		EMI/RFI shield			
NO	YES	NO	YES	NO	YES	NO	YES	NO	YES	"N" (H x V)	
001	061	121	181	241	301	361	421	481	541	1 (1 x 1)	2V
002	062	122	182	242	302	362	422	482	542	2 (2 x 1)	"
003	063	123	183	243	303	363	423	483	543	3 (3 x 1)	"
004	064	124	184	244	304	364	424	484	544	4 (4 x 1)	"
005	065	125	185	245	305	365	425	485	545	5 (5 x 1)	"
006	066	126	186	246	306	366	426	486	546	6 (6 x 1)	"
007	067	127	187	247	307	367	427	487	547	7 (7 x 1)	2H
008	068	128	188	248	308	368	428	488	548	8 (8 x 1)	"
009	069	129	189	249	309	369	429	489	549	9 (9 x 1)	"
010	070	130	190	250	310	370	430	490	550	10 (10 x 1)	"
011	071	131	191	251	311	371	431	491	551	1 (1 x 1)	2V2H
012	072	132	192	252	312	372	432	492	552	2 (2 x 1)	"
013	073	133	193	253	313	373	433	493	553	3 (3 x 1)	"
014	074	134	194	254	314	374	434	494	554	4 (4 x 1)	"
015	075	135	195	255	315	375	435	495	555	5 (5 x 1)	"
016	076	136	196	256	316	376	436	496	556	6 (6 x 1)	"
017	077	137	197	257	317	377	437	497	557	7 (7 x 1)	"
018	078	138	198	258	318	378	438	498	558	8 (8 x 1)	"
019	079	139	199	259	319	379	439	499	559	9 (9 x 1)	"
020	080	140	200	260	320	380	440	500	560	10 (10 x 1)	"
021	081	141	201	261	321	381	441	501	561	2 (1 x 2)	2V
022	082	142	202	262	322	382	442	502	562	4 (2 x 2)	"
023	083	143	203	263	323	383	443	503	563	6 (3 x 2)	"
024	084	144	204	264	324	384	444	504	564	8 (4 x 2)	"
025	085	145	205	265	325	385	445	505	565	10 (5 x 2)	"
026	086	146	206	266	326	386	446	506	566	12 (6 x 2)	"
027	087	147	207	267	327	387	447	507	567	14 (7 x 2)	2H
028	088	148	208	268	328	388	448	508	568	16 (8 x 2)	"
029	089	149	209	269	329	389	449	509	569	18 (9 x 2)	"
030	090	150	210	270	330	390	450	510	570	20 (10 x 2)	"
031	091	151	211	271	331	391	451	511	571	2 (1 x 2)	2V2H
032	092	152	212	272	332	392	452	512	572	4 (2 x 2)	"
033	093	153	213	273	333	393	453	513	573	6 (3 x 2)	"
034	094	154	214	274	334	394	454	514	574	8 (4 x 2)	"
035	095	155	215	275	335	395	455	515	575	10 (5 x 2)	"
036	096	156	216	276	336	396	456	516	576	12 (6 x 2)	"
037	097	157	217	277	337	397	457	517	577	14 (7 x 2)	"
038	098	158	218	278	338	398	458	518	578	16 (8 x 2)	"
039	099	159	219	279	339	399	459	519	579	18 (9 x 2)	"
040	100	160	220	280	340	400	460	520	580	20 (10 x 2)	"

See footnotes at end of table.

TABLE III Matrix frame dash numbers - Continued

Dash numbers										Number of stations "N"	Mounting style 1/
Style											
C		S		W		L		I (indicator only)			
EMI/RFI shield		EMI/RFI shield		EMI/RFI shield		EMI/RFI shield		EMI/RFI shield			
NO	YES	NO	YES	NO	YES	NO	YES	NO	YES	"N" (H x V)	
041	101	161	221	281	341	401	461	521	581	1 (1 x 1)	Dress bezel
042	102	162	222	282	342	402	462	522	582	2 (2 x 1)	"
043	103	163	223	283	343	403	463	523	583	3 (3 x 1)	"
044	104	164	224	284	344	404	464	524	584	4 (4 x 1)	"
045	105	165	225	285	345	405	465	525	585	5 (5 x 1)	"
046	106	166	226	286	346	406	466	526	586	6 (6 x 1)	"
047	107	167	227	287	347	407	467	527	587	7 (7 x 1)	"
048	108	168	228	288	348	408	468	528	588	8 (8 x 1)	"
049	109	169	229	289	349	409	469	529	589	9 (9 x 1)	"
050	110	170	230	290	350	410	470	530	590	10 (10 x 1)	"
051	111	171	231	291	351	411	471	531	591	2 (1 x 2)	"
052	112	172	232	292	352	412	472	532	592	4 (2 x 2)	"
053	113	173	233	293	353	413	473	533	593	6 (3 x 2)	"
054	114	174	234	294	354	414	474	534	594	8 (4 x 2)	"
055	115	175	235	295	355	415	475	535	595	10 (5 x 2)	"
056	116	176	236	296	356	416	476	536	596	12 (6 x 2)	"
057	117	177	237	297	357	417	477	537	597	14 (7 x 2)	"
058	118	178	238	298	358	418	478	538	598	16 (8 x 2)	"
059	119	179	239	299	359	419	479	539	599	18 (9 x 2)	"
060	120	180	240	300	360	420	480	540	600	20 (10 x 2)	"

1/ 2V = Rear mount, 2 vertical flanges (see figure 1).
2H = Rear mount, 2 horizontal flanges (see figure 1).
2V2H = Rear mount, 4 flanges (see figure 1)
Dress Bezel See figure 2. The correct number of mounting cleat assemblies, plus one extra, shall be supplied with each matrix frame

CONCLUDING MATERIAL

Preparing activity:
Navy - EC

Agent
DLA - ES

(Project 5930-N719)