MILITARY SPECIFICATION SHEET

SWITCHES, MULTISTATION, PUSH BUTTON, (ILLUMINATED MATRIX ARRANGEMENT)
RFI SHIELDED, MOISTURE SEALED, HIGH IMPACT SHOCK, STYLE SM07

This specification is approved for use by the Space and Naval Warfare Systems Command, Department of the Navy, and is available for use by all Departments and Agencies of the Department of Defense.

The requirements for acquiring the product described herein shall consist of this specification sheet and the issue of the following specification listed in that issue of the Department of Defense Index of Specifications and Standards (DODISS) specified in the solicitation MIL-S-24317.

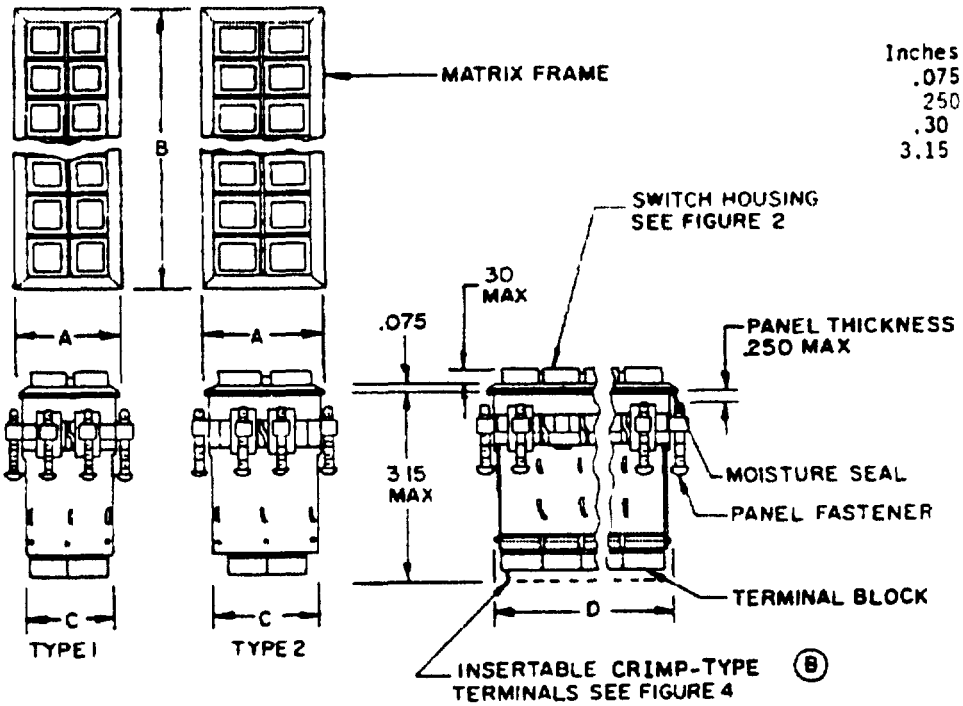

Inches	mm
.075	1.91
.250	6.35
.30	7.62
3.15	80.01

NOTES
1. Dimensions are in inches
2. Metric equivalents are given for general information only.
3. Unless otherwise specified, tolerances are ±.016 (0.41 mm) for three place decimals
4. Design configuration is optional within envelope dimensions shown

FIGURE 1. Complete matrix

(B) denotes changes

DISTRIBUTION STATEMENT A Approved for public release, distribution is unlimited.

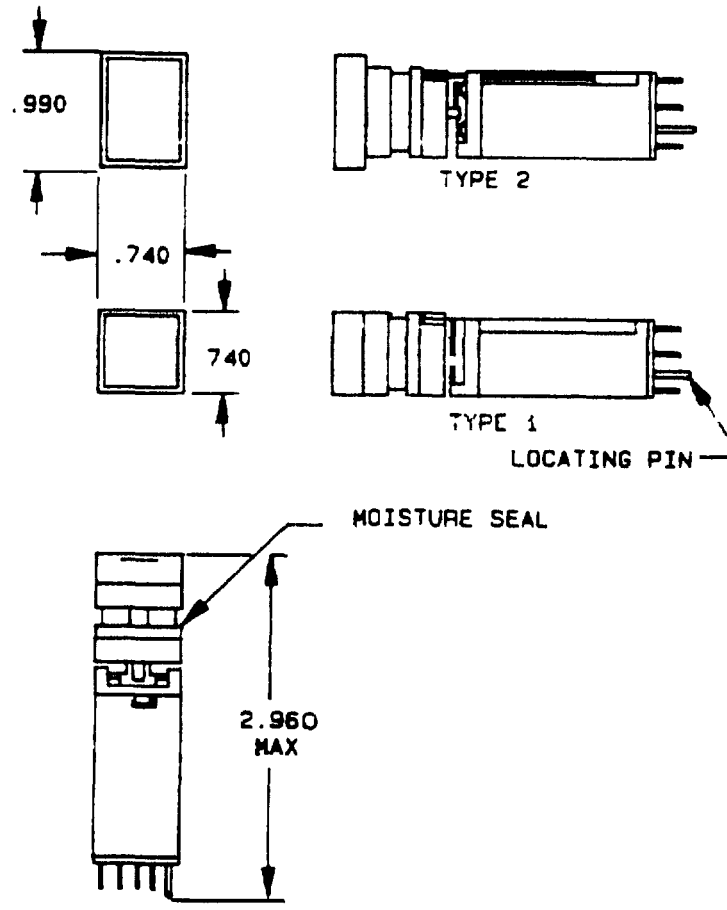

Inches	mm
.740	18.80
990	25.15
2 960	75.18

NOTES.
1. Dimensions are in inches.
2. Metric equivalents are given for general information only.
3. Unless otherwise specified, tolerances are ±.010 (0.25 mm).
4 RFI ground shall be provided. (Either on switch module or on lens module)

FIGURE 2 Plug-in switch/indicator module per MIL-S-22885/80.

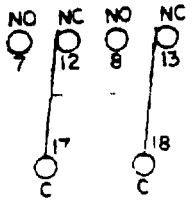

Switch circuitry
2 PDT momentary action

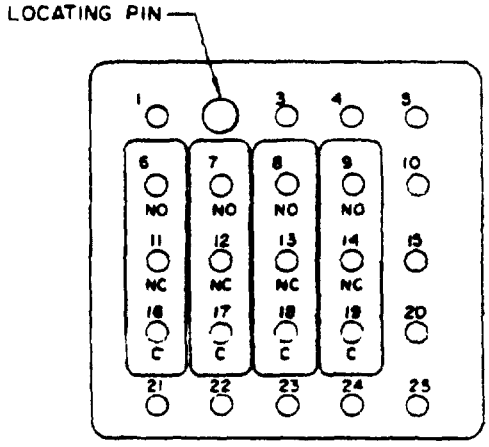

(Rear view - terminal block)
Switch terminal identification

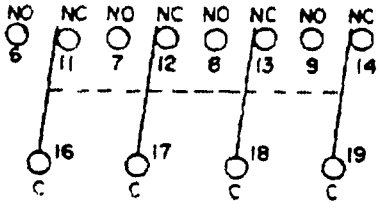

Switch circuitry
4 PDT momentary action

CODE	LAMP CIRCUITRY
1	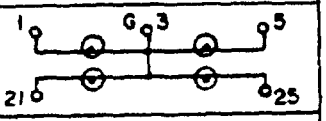
2	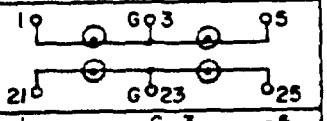
3	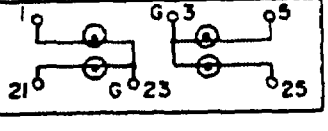

FIGURE 3 Switch and lamp circuitry schematics

REQUIREMENTS:

Dimensions and configuration. See figures and tables

Complete multistation switch assembly shall consist of

1. Multistation matrix frame (figure 1 and table IV)
2. Plug-in switch/indicator module in accordance with MIL-S-22885/80, when specified in contract or purchase order.
3. Insertable crimp type terminals (figure 4), when specified in contract or purchase order (B)
4. 4 Lamps per station (T-1-3/4 midget flange base incandescent) when specified in contract or purchase order.

Matrix frame. Includes terminal block and fasteners

RFI shielding. Grounded lens screen shall be provided.

Plug-in switch/indicator module Includes switch (except indicator modules), lamp housing, lens assembly (in accordance with MIL-S-22885/82) and RFI screen

Electrical. See table I.

TABLE I. Electrical ratings.

Load	Sea level	
	28 V dc (amperes)	115 V ac (amperes)
Resistive	5.0	5.0
Inductive	2.5	2.5

Operating force 4 pounds maximum

Lens face. Shall appear white in the unlighted condition In the lighted condition, it shall appear in a color determined by the color filter.

Lens and color filter material In accordance with MIL-S-22885/82

Colors and photometric brightness. In accordance with table III and MIL-S-22885

Solderability: Not applicable.

Lamp retention. Applicable.

Shock· Method II (high impact).

Torque strength of plunger. Not applicable.

Seal Dripproof

Contact resistance: Not applicable after electrical endurance, inductive load dc.

QUALIFICATION

Qualification and group C inspection Qualification and group C inspection of the multistation switch shall be in accordance with table II.

(B) Extent of qualification The multistation switch/indicator assembly to be used for qualification inspection shall be the 3-station unit (1 x 3 matrix) Qualification of the 3-station unit shall qualify all multistation units up to and including the 20-station unit The qualification 3-station units shall contain one each of the following items Location of each item in the matrix will be determined by the testing activity

Item	Part number	Description	Quantity
1	M24317/8-03	1 x 3 matrix frame, type 1	1
2	M22885/80-CAC(X)	2PDT momentary switch module	1
3	M22885/80-CBC(X)	4PDT momentary switch module	1
4	M22885/80-CEC(X)	Indicator module	1
1	M24317/8-39	1 x 3 matrix frame, type 2	1
2	M22885/80-HAC(X)	2PDT momentary switch module	1
3	M22885/80-HBC(X)	4PDT momentary switch module	1
4	M22885/80-HEC(X)	Indicator module	1

Group submission The following applies when the 3-station units (1 x 3 matrix), type 1 and type 2, are submitted for qualification at the same time

TABLE II Qualification inspection (group submission) 1/ 2/

Assembly	Qualification inspection table V of MIL-S-24317		Extent of approval
	Group	Number of sample units	
Schedule I Type 1 (1 x 3 matrix) M24317/8-03	I II III	8 4 3/ 2	All
Schedule II Type 2 (1 x 3 matrix) M24317/8-39	I II	4 4 3/	All

1/ Simultaneity not applicable
2/ Basic switch is M22885/80.
3/ Two sample units are required for qualification for shock (high-impact), method II and shall be subjected to groups I and II only.

(B) Qualification and group C inspection Group C inspection shall be in accordance with MIL-S-24317, except that the inspection shall be as shown in table II, herein, and shall be performed at 36-month intervals

(B) Group A inspection Group A inspection of the matrix frames shall be in accordance with table III Group A inspection summary shall be submitted at 12-month intervals

(B) Group B inspection Not applicable for matrix frames

(B) TABLE III Group A inspection for matrix frames

Examination or test	AQL (percent defective)	
	Major	Minor
Visual and mechanical examination - - - - - - - - -	1.0 1/	4.0
Dielectric withstanding voltage - - - - - - - - - -	.65	---

1/ At the option of the contractor, in-process inspection may be used to meet the materials, and design and construction, requirements provided they meet the acceptable quality level and all of the contractors in-process control data on these tests are made available to the Government on request. Only two samples per lot need be inspected for compliance to physical dimensions.

Matrix frame part number M24317/8- (dash number from table V)

(B) TABLE IV Chromaticity limits and photometric brightness

Colors	Chromaticity limits 1/ 2,360° Kelvin		Switch photometric brightness (foot-lamberts) 2/
	X	Y	
Green	.260 300 .160 .200	.570 630 660 720	8 ft lamberts minimum
Yellow	562 .570 596 .605	415 SL 3/ .382 SL 3/	150 ft lamberts minimum
Red	.695 .703 .655 660	.285 SL 3/ 325 SL 3/	40 ft lamberts minimum
Blue	150 .220 .220 150	.260 .260 .320 .320	3 ft. lamberts minimum
White	400 .460 460 .400	420 .420 .380 .380	55 ft lamberts minimum

1/ The chromaticities of the diffusing lenses or colored filters expressed as X and Y coordinates on the CIE chromaticity diagram shall lie within areas bounded by the coordinates listed for each color, using a source illuminate of 2,360°K

2/ Switch photometric brightness, when viewed from the front of the applicable light housing

3/ SL Spectrum locus (where intersected by other coordinate pair)

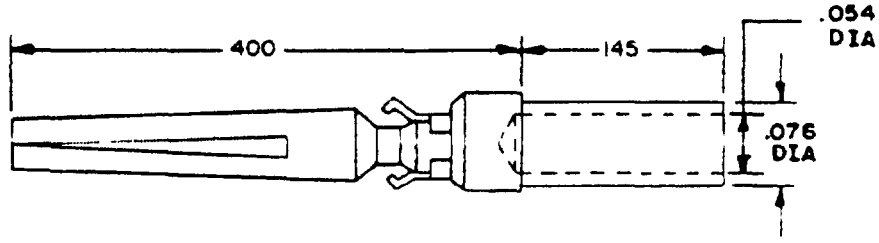

Inches	mm
.054	1.37
.076	1.93
145	3 68
.400	10.16

NOTES:
1. Dimensions are in inches.
2. Metric equivalents are given for general information only.
3. unless otherwise specified, tolerances are ±.010 (0.25 mm)
4 Design configuration is optional within envelope dimensions shown
5 Terminal will accept one No. 18 AWG or smaller stranded wire size and are supplied 25 each in a bag under part number M22885/80-50.

Ⓑ FIGURE 4. Terminal, crimp-type.

(B) TABLE V Part number, matrix housings, number of stations and dimensions for fabricated matrix configurations, to accept type I and type II switches.

Part number M24317/8- 1/	Matrix arrangement H V	Number of stations	Dimensions 2/ 3/				Number of fasteners per side	
			A Horizontal	B Vertical	Recommended panel cutout		Horizontal side	Vertical side
					C +.020 -.000	D + 020 -.000		
TYPE I								
01	1 x 1	1	1.150 (29 21)	1.150 (29.21)	.990 (25.15)	.990 (25.15)	1	1
02	1 x 2	2	1 150 (29 21)	1.950 (49.53)	990 (25.15)	1.790 (45 46)	1	2
03	1 x 3	3	1.150 (29 21)	2.750 (69 85)	990 (25 15)	2 590 (65 79)	1	3
04	1 x 4	4	1.150 (29.21)	3.550 (90.17)	.990 (25.15)	3.390 (86.11)	1	4
05	1 x 5	5	1.150 (29 21)	4.350 (110 49)	.990 (25.15)	4.190 (106.43)	1	5
06	1 x 6	6	1.150 (29.21)	5.150 (130.81)	.990 (25.15)	4 990 (126.75)	1	6
07	1 x 7	7	1 150 (29 21)	5.950 (150 13)	.990 (25 15)	5.790 (147.07)	1	7
08	1 x 8	8	1.150 (29.21)	6.750 (170.45)	.990 (25.15)	6.590 (167 39)	1	8
09	1 x 9	9	1.150 (29 21)	7.550 (190.77)	.990 (25.15)	7.390 (187.71)	1	9
10	1 x 10	10	1.150 (29.21)	8.350 (211.09)	.990 (25.15)	8.190 (208.03)	1	10
11	2 x 1	2	1.950 (49.53)	1.150 (29.21)	1.790 (45.46)	.990 (25 15)	2	1
12	2 x 2	4	1.950 (49.53)	1.950 (49.53)	1.790 (45.46)	1 790 (45.46)	2	2
13	2 x 3	6	1.950 (49 53)	2.750 (68.85)	1.790 (45.46)	2.590 (65 79)	2	3
14	2 x 4	8	1.950 (49.53)	3.550 (90.17)	1 790 (45.46)	3.390 (86.11)	2	4
15	2 x 5	10	1.950 (49.53)	4.350 (110.49)	1.790 (45.46)	4.190 (106.43)	2	5
16	2 x 6	12	1.950 (49.53)	5.150 (130.81)	1 790 (45.46)	4.990 (126.75)	2	6
17	2 x 7	14	1 950 (49.53)	5.950 (150.13)	1.790 (45.46)	5.790 (147.07)	2	7
18	2 x 8	16	1.950 (49.53)	6.750 (170.45)	1.790 (45 46)	6 590 (167.39)	2	8
19	2 x 9	18	1.950 (49.53)	7.550 (190.77)	1.790 (45 46)	7.390 (187.71)	2	9
20	2 x 10	20	1.950 (49.53)	8.350 (211.09)	1.790 (45.46)	8 190 (208.03)	2	10

See footnotes at end of table

(B) TABLE V. Part number, matrix housings, number of stations and dimensions for fabricated matrix configurations, to accept type I and type II switches - Continued.

Part number M24317/8- 1/	Matrix arrangement H V	Number of stations	Dimensions 2/ 3/ A Horizontal	B Vertical	Recommended panel cutout C +.020 -.000	D +.020 -.000	Number of fasteners per side Horizontal side	Vertical side
				TYPE I				
21	3 x 1	3	2.750 (69 85)	1.150 (29.21)	2.590 (65.79)	.990 (25.15)	3	1
22	3 x 2	6	2 750 (69.85)	1 950 (49.53)	2.590 (65.79)	1.790 (45.46)	3	2
23	4 x 1	4	3.550 (90.17)	1.150 (29.21)	3.390 (86.11)	.990 (25.15)	4	1
24	4 x 2	8	3.550 (90.17)	1.950 (49.53)	3.390 (86.11)	1.790 (45.46)	4	2
25	5 x 1	5	4.350 (110.49)	1.150 (29.21)	4.190 (106 43)	.990 (25 15)	5	1
26	5 x 2	10	4.350 (110.49)	1.950 (49.53)	4.190 (106.43)	1.790 (45.46)	5	2
27	6 x 1	6	5 150 (130.81)	1.150 (29.21)	4.990 (126.75)	990 (25.15)	6	1
28	6 x 2	12	5.150 (130.81)	1.950 (49.53)	4.990 (126.75)	1.790 (45.46)	6	2
29	7 x 1	7	5.950 (150.13)	1.150 (29.21)	5.790 (147.07)	.990 (25.15)	7	1
30	7 x 2	14	5.950 (150.13)	1.950 (49.53)	5.790 (147.07)	1.790 (45.46)	7	2
31	8 x 1	8	6.750 (170.45)	1.150 (29.21)	6.590 (167.39)	.990 (25 15)	8	1
32	8 x 2	16	6 750 (170.45)	1.950 (49.53)	6.590 (167.39)	1.790 (45.46)	8	2
33	9 x 1	9	7.550 (190.77)	1.150 (29.21)	7.390 (187.71)	.990 (25.15)	9	1
34	9 x 2	18	7.550 (190.77)	1.950 (49.53)	7.390 (187.71)	1.790 (45.46)	9	2
35	10 x 1	10	8.350 (211.09)	1.150 (29.21)	8.190 (208.03)	.990 (25.15)	10	1
36	10 x 2	20	8.350 (211.09)	1.950 (49.53)	8.190 (208.03)	1.790 (45.46)	10	2
				TYPE II				
37	1 x 1	1	1.410 (35.81)	1.150 (29.21)	1.250 (31.75)	.990 (25.15)	1	1
38	1 x 2	2	1.410 (35 81)	1.950 (49.53)	1.250 (31.75)	1.790 (45.46)	1	2
39	1 x 3	3	1.410 (35.81)	2.750 (69.85)	1.250 (31 75)	2.590 (65.79)	1	3
40	1 x 4	4	1 410 (35 81)	3.550 (90 17)	1 250 (31 75)	3.390 (86 11)	1	4

See footnotes at end of table.

(B) TABLE V. Part number, matrix housings, number of stations and dimensions for fabricated matrix configurations, to accept type I and type II switches - Continued.

Part number M24317/8- 1/	Matrix arrangement H V	Number of stations	Dimensions 2/ 3/ A Horizontal	B Vertical	Recommended panel cutout C + .020 -.000	D + .020 -.000	Number of fasteners per side Horizontal side	Vertical side
				TYPE II				
41	1 x 5	5	1.410 (35.81)	4.350 (110.49)	1.250 (31.75)	4.190 (106.43)	1	5
42	1 x 6	6	1.410 (35.81)	5.150 (130.81)	1.250 (31.75)	4.990 (126.75)	1	6
43	1 x 7	7	1.410 (35.81)	5.950 (150.13)	1.250 (31.75)	5.790 (147.07)	1	7
44	1 x 8	8	1.410 (35.81)	6.750 (170.45)	1.250 (31.75)	6.590 (167.39)	1	8
45	1 x 9	9	1.410 (35.81)	7.550 (190.77)	1.250 (31.75)	7.390 (187.71)	1	9
46	1 x 10	10	1.410 (35.81)	8.350 (211.09)	1.250 (31.75)	8.190 (208.03)	1	10
47	2 x 1	2	2.460 (62.48)	1.150 (29.21)	2.300 (58.42)	.990 (25.15)	2	1
48	2 x 2	4	2.460 (62.48)	1.950 (49.53)	2.300 (58.42)	1.790 (45.46)	2	2
49	2 x 3	6	2.460 (62.48)	2.750 (68.85)	2.300 (58.42)	2.590 (65.79)	2	3
50	2 x 4	8	2.460 (62.48)	3.550 (90.17)	2.300 (58.42)	3.390 (86.11)	2	4
51	2 x 5	10	2.460 (62.48)	4.350 (110.49)	2.300 (58.42)	4.190 (106.43)	2	5
52	2 x 6	12	2.460 (62.48)	5.150 (130.81)	2.300 (58.42)	4.990 (126.75)	2	6
53	2 x 7	14	2.460 (62.48)	5.950 (150.13)	2.300 (58.42)	5.790 (147.07)	2	7
54	2 x 8	16	2.460 (62.48)	6.750 (170.45)	2.300 (58.42)	6.590 (167.39)	2	8
55	2 x 9	18	2.460 (62.48)	7.500 (190.77)	2.300 (58.42)	7.390 (187.71)	2	9
56	2 x 10	20	2.460 (62.48)	8.350 (211.09)	2.300 (58.42)	8.190 (208.03)	2	10
57	3 x 1	3	3.510 (89.15)	1.150 (29.21)	3.350 (85.09)	.990 (25.15)	3	1
58	3 x 2	6	3.510 (89.15)	1.950 (49.53)	3.350 (85.09)	1.790 (45.46)	3	2
59	4 x 1	4	4.560 (115.82)	1.150 (29.21)	4.400 (111.76)	.990 (25.15)	4	1
60	4 x 2	8	4.560 (115.82)	1.950 (49.53)	4.400 (111.76)	1.790 (45.46)	4	2

See footnotes at end of table.

(B) TABLE V. Part number, matrix housings, number of stations and dimensions for fabricated matrix configurations, to accept type I and type II switches - Continued.

Part number M24317/8- 1/	Matrix arrangement H V	Number of stations	Dimensions 2/ 3/				Number of fasteners per side	
			A Horizontal	B Vertical	Recommended panel cutout		Horizontal side	Vertical side
					C +.020 -.000	D +.020 -.000		
TYPE II								
61	5 x 1	5	5.610 (142.49)	1.150 (29.21)	5.450 (138 43)	.990 (25.15)	5	1
62	5 x 2	10	5.610 (142.49)	1.950 (49.53)	5.450 (138.43)	1.790 (45.46)	5	2
63	6 x 1	6	6.660 (169.16)	1.150 (29.21)	6.500 (165.10)	990 (25.15)	6	1
64	6 x 2	12	6.660 (169.16)	1.950 (49.53)	6.500 (165.10)	1.790 (45.46)	6	2
65	7 x 1	7	7.710 (195.83)	1.150 (29.21)	7.550 (191 77)	.990 (25 15)	7	1
66	7 x 2	14	7.710 (195.83)	1.950 (49.53)	7.550 (191.77)	1.790 (45.46)	7	2
67	8 x 1	8	8 760 (222.50)	1.150 (29.21)	8.600 (218.44)	990 (25.15)	8	1
68	8 x 2	16	8.760 (222.50)	1.950 (49.53)	8.600 (218.44)	1.790 (45.46)	8	2
69	9 x 1	9	9.810 (249.17)	1.150 (29.21)	9.650 (245.11)	.990 (25.15)	9	1
70	9 x 2	18	9.810 (249.17)	1.950 (49.53)	9.650 (245.11)	1.790 (45.46)	9	2
71	10 x 1	10	10.860 (275.84)	1.150 (29.21)	10.700 (271.78)	.990 (25.15)	10	1
72	10 x 2	20	10.860 (275.84)	1.950 (49.53)	10.700 (271.78)	1.790 (45.46)	10	2

1/ Dash numbers shown are for matrix frame with fasteners only, does not include plug-in switch/indicator module or crimp type terminals.

2/ Metric dimensions in parentheses are given for general information only and are based upon 1 inch = 25.4 mm.

3/ Unless otherwise specified, tolerances are ±.016 (0.41 mm).

CONCLUDING MATERIAL

Preparing activity
Navy - EC

Agent:
DLA - ES

(Project 5930-N678)