FED. SUP CLASS
5935

© CANCELED WITH NO SUPERSEDING STANDARD

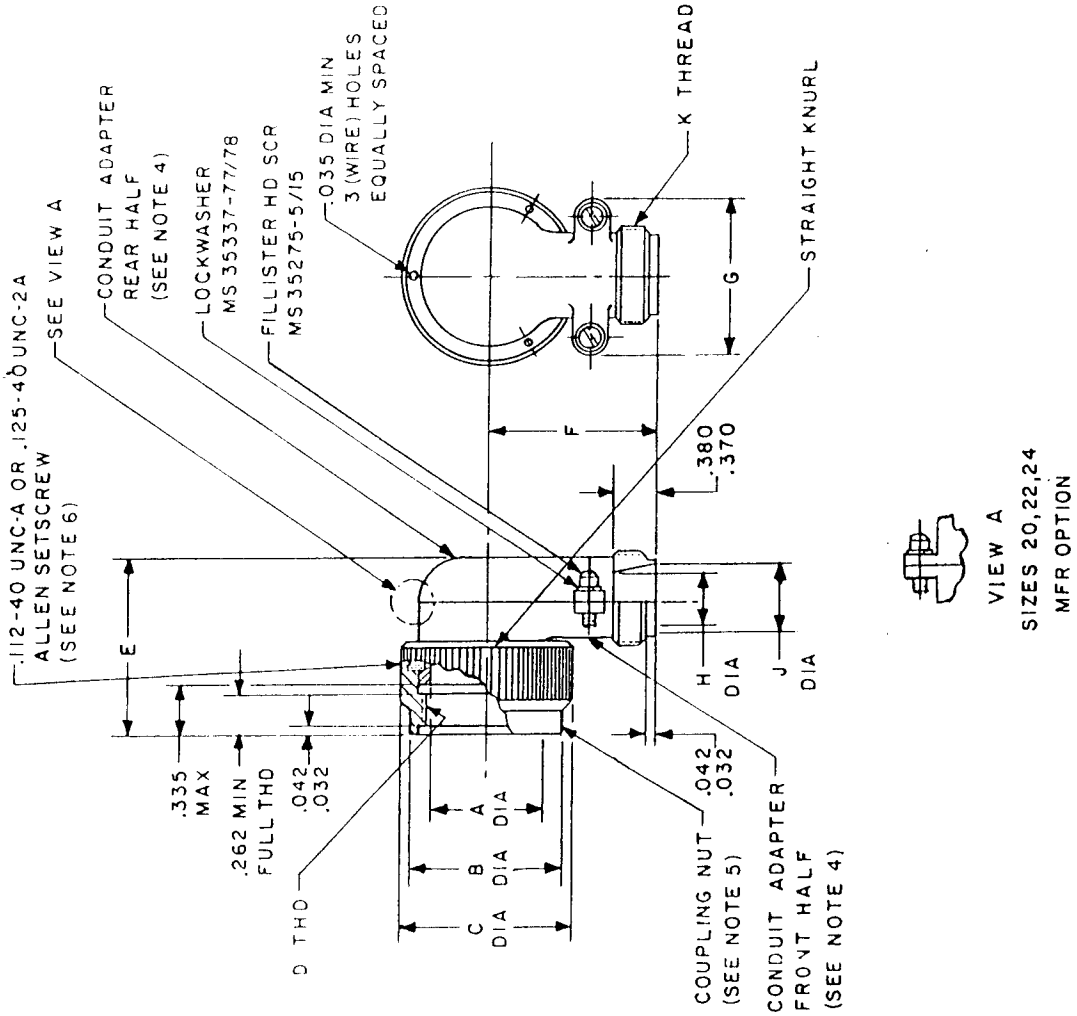

INACTIVE FOR AIR FORCE NEW DESIGN EQUIPMENT OR MODIFICATION OF EXISTING EQUIPMENT AFTER 14 NOVEMBER 1977

NO SUPERSEDING STANDARD

APPROVED 28 Jul 70 REVISED (A) 19 Feb 71 (B) 14 Nov 77 (C) 17 FEB 88

P.A AF - 85 Other Cust	International Interest	TITLE ADAPTER, CONDUIT, RIGHT ANGLE	MILITARY STANDARD MS27557(USAF)
Procurement Specification MIL-C-26500		SUPERSEDES:	PAGE 1 OF 2

(Limited coordinated) PREVIOUS EDITIONS OF THIS FORM ARE OBSOLETE 5935-F319-05

AMSC N/A

DISTRIBUTION STATEMENT A. Approved for public release, distribution is unlimited.

☆U.S. GOVERNMENT PRINTING OFFICE: 1988 — 505-033/90750

This military standard is approved for use by Engineering and Technical Support Division, AFLC/LOIE, Department of the Air Force and is available for use by all Departments and Agencies of the Department of Defense.

Review activities: AF - 11, 17, 99 User activities: DLA - ES