FED. SUP CLASS 5935

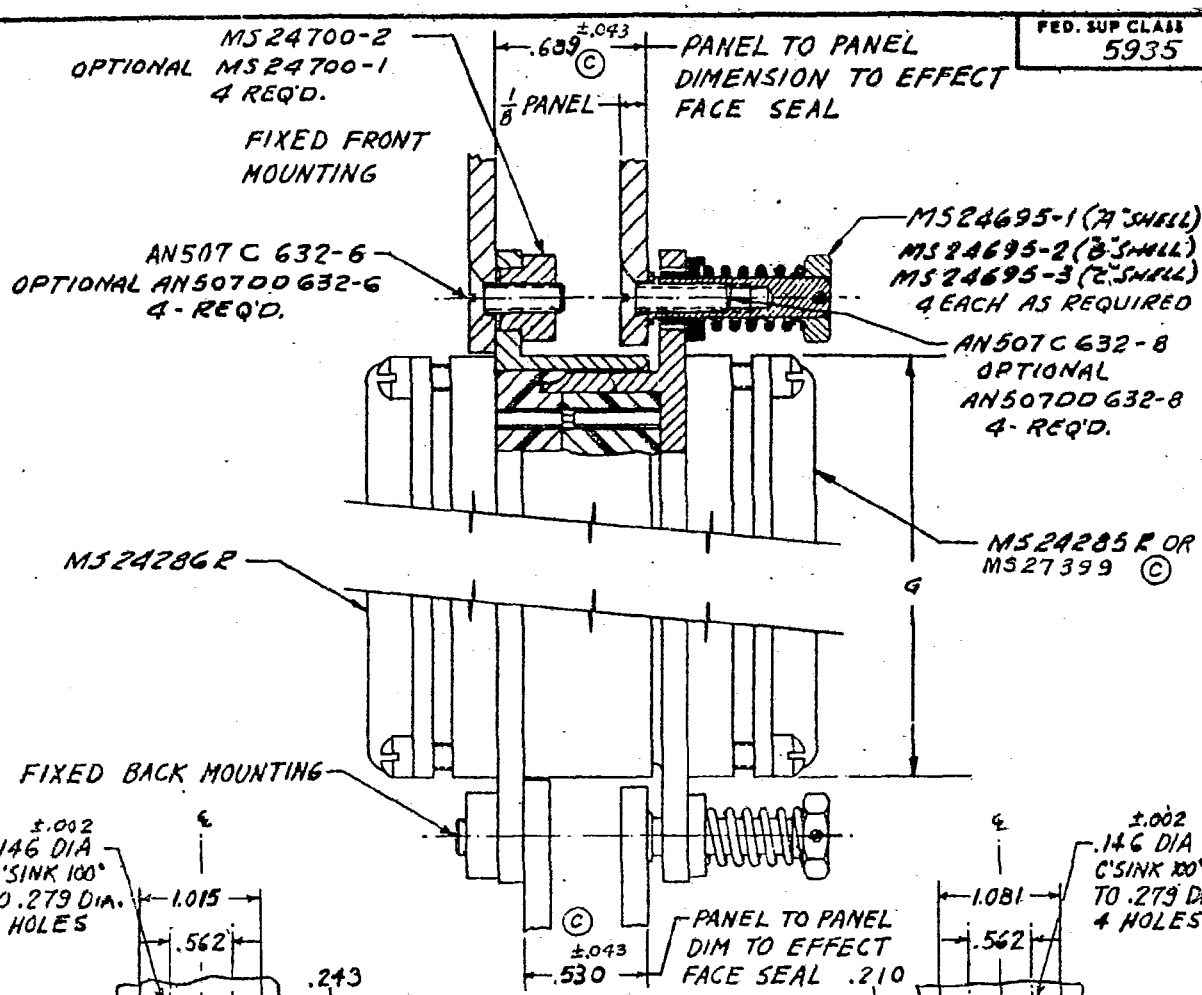

DIM	SHELL SIZE A	B	C
D	3.875	2.445	2.000
E	3.454	2.025	1.580
F	3.388	1.959	1.528
G	3.375	1.945	1.516

THIS IS A DESIGN STANDARD. NOT TO BE USED AS PART NUMBER.

DIMENSIONS IN INCHES. UNLESS OTHERWISE SPECIFIED, TOLERANCES: FRACTIONS ± 1/64, DECIMALS ±.005.

MATING AND MOUNTING DETAILS OF MS24285R, MS24286R AND MS27399 © CONNECTORS FOR SERVICE OR TEST.

REFERENCED DOCUMENTS SHALL BE ISSUE IN EFFECT ON DATE OF INVITATIONS FOR BID. © FOR CHANGES SEE SHEET 1&2

THIS STANDARD TAKES PRECEDENCE OVER DOCUMENTS REFERENCED HEREIN.

APPROVED 13 Oct 60 REVISED ① 16 JAN. 1961 ② 7 MAR. 1962 © 15 JUN 1965

P.A. USAF-11
Other Cust

TITLE MATED ASSEMBLY, CONNECTOR, RACK AND PANEL, MINIATURE

MILITARY STANDARD

MS24287 (USAF)

ended has been approved by the use of the Air Force and is mandatory for use by ...ivity. All other military activities are required ...y this standard where suitable.

FED. SUP CLASS 5935

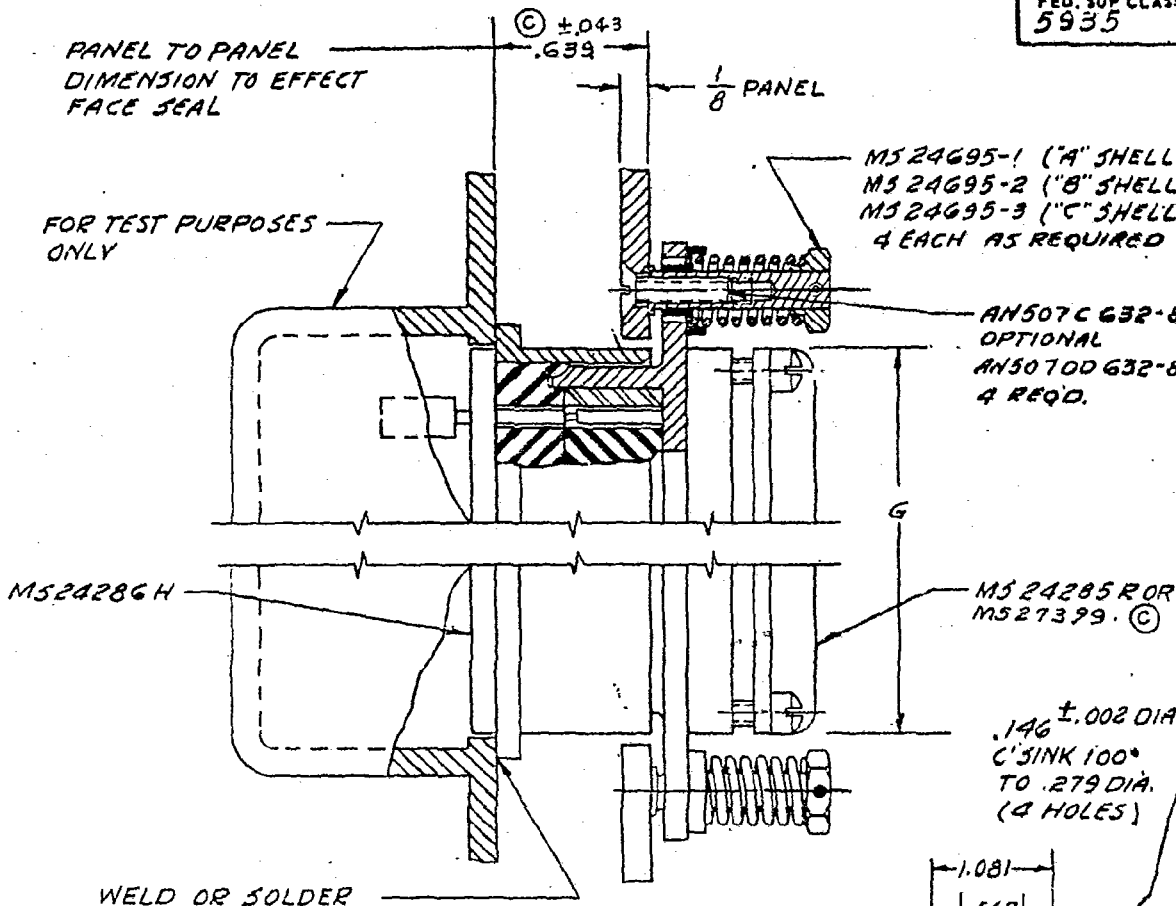

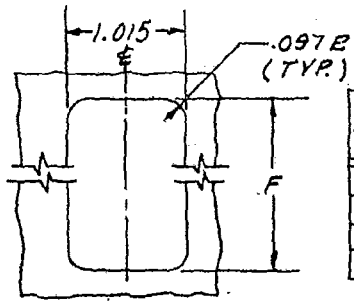

PANEL CUT-OUT
(FOR CLASS "H" CONNECTORS)

DIM	SHELL SIZE		
	A	B	C
D	3.875	2.445	2.000
E	3.454	2.025	1.580
F	3.388	1.959	1.528
G	3.375	1.945	1.516

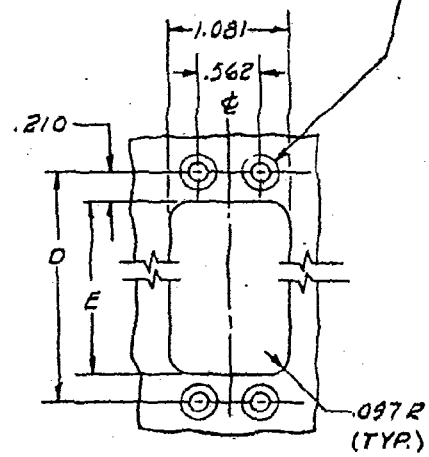

PANEL CUT-OUT
(FOR CLASS "R" CONNECTORS)
FLOATING MOUNT

THIS IS A DESIGN STANDARD. NOT TO BE USED AS A PART NUMBER.
DIMENSIONS IN INCHES. UNLESS OTHERWISE SPECIFIED, TOLERANCES:
FRACTIONS ± 1/64, DECIMALS ± .005. ©
MATING AND MOUNTING DETAILS OF MS24285R, MS24286H AND MS27399
CONNECTORS FOR SERVICE OR TEST.
REFERENCED DOCUMENTS SHALL BE ISSUE IN EFFECT ON DATE OF INVITATIONS FOR BIDS.
THIS STANDARD TAKES PRECEDENCE OVER DOCUMENTS REFERENCED HEREIN.

REVISED ⓐ FOR CHANGES SEE SHEET 1 ⓑ 7 MAR 62 © FOR CHANGES SEE SHEETS 1 AND 2

APPROVED

P.A. USAF-11 Other Cust	TITLE MATED ASSEMBLY, CONNECTOR RACK AND PANEL, MINIATURE	MILITARY STANDARD MS24287 (USAF)
PROCUREMENT SPECIFICATION MIL-C-26518	SUPERSEDES:	SHEET 2 OF

This standard has been approved by the AIR FORCE and is mandatory for use by all other military activities are required to adopt standard where suitable.

This standard Digest not to be used