FED. SUP CLASS
5935

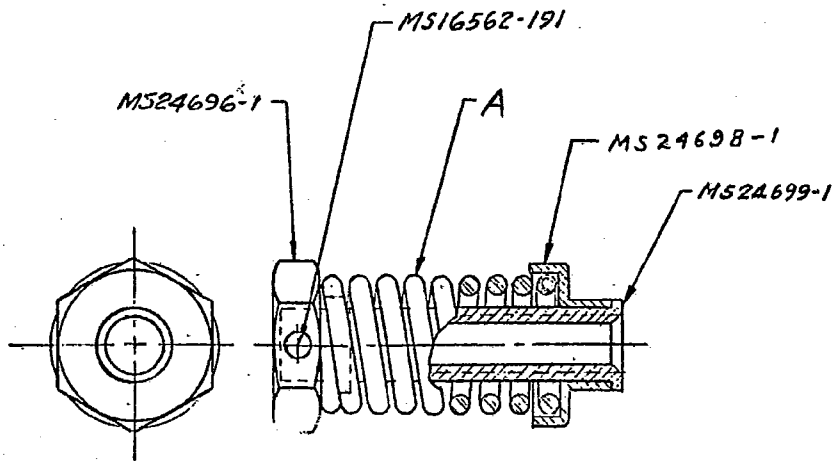

MS PART NO.	A
MS24695-1	MS24697-1
MS24695-2	MS24697-2
MS24695-3	MS24697-3

NOTICE.—When Government drawings, specifications, or other data are used for any purpose other than in connection with a definitely related Government procurement operation, the United States Government thereby incurs no responsibility, nor any obligation whatsoever; and the fact that the Government may have formulated, furnished, or in any way supplied the said drawings, specifications, or other data is not to be regarded by implication or otherwise as in any manner licensing the holder or any other person or corporation, or conveying any rights or permission to manufacture, use, or sell any patented invention that may in any way be related thereto.

...ndard has been approved by the Department of the Air Force and is mandatory for use by that activity. All other military activities are required to employ this standard where suitable.

APPROVED 13 OCT 60 REVISED

P.A.	TITLE	MILITARY STANDARD
Other Cust: USAF	SPRING LOADED MOUNTING ASSEMBLY, CONNECTOR, RACK AND PANEL, MINIATURE	MS 24695 (USAF)
PROCUREMENT SPECIFICATION: MIL-C-26518	SUPERSEDES:	SHEET 1 OF 1