This standard has been approved by the Departments of the AIR FORCE and is mandatory for use by that activity. All other military activities are required to employ this standard where suitable.

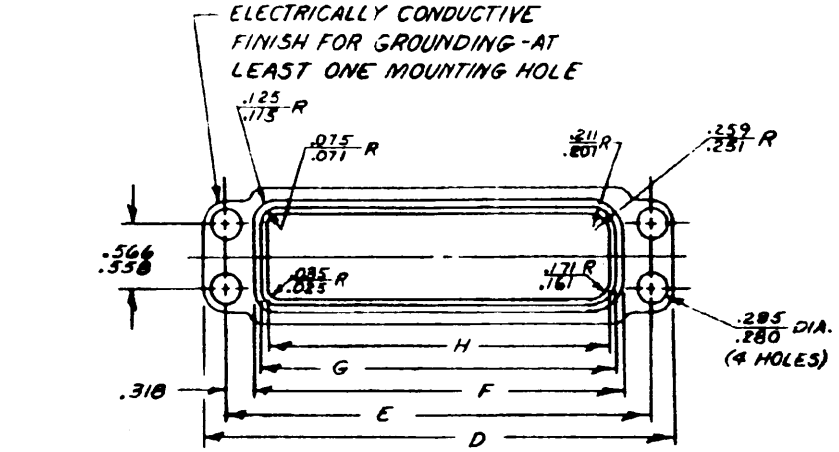

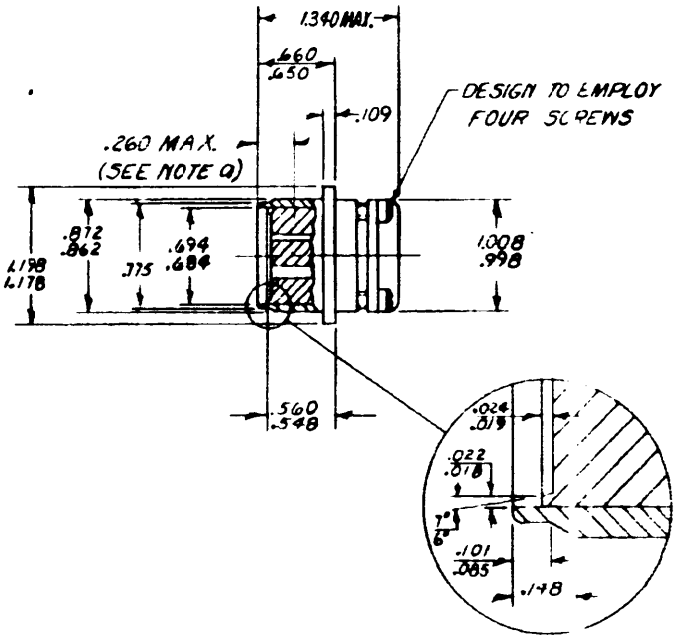

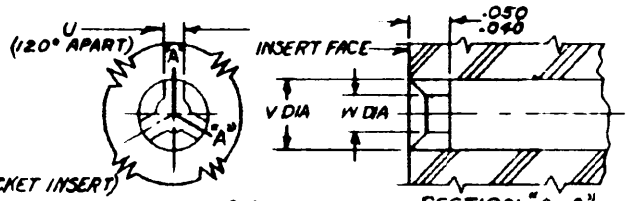

STYLE S (SOCKET INSERT)
ENVIRONMENT RESISTANT (R) PLUGS

SECTION "A-A"

SHELL SIZE	D ±.005	E ±.004	F ±.005	G	H ±.005	FOR MS INSERT ARRANGEMENT SEE DWG
A	4.296	3.875	3.239	3.147	3.061	MS24288
B	2.866	2.445	1.809	1.717	1.631	MS24288
C	2.421	2.000	1.380	1.288	1.202	MS24288

CONTACT POCKET DIMENSIONS							
DIM	CONTACT SIZE						
	20	16	12	8	4	SHIELDED NO. 1	SHIELDED NO. 2
U	.020 / .017	.031 / .028	.038 / .034	.044 / .040	.044 / .040	.038 / .034	.044 / .040
V	.113 / .110	.148 / .145	.196 / .192	.287 / .283	.372 / .368	.196 / .192	.287 / .283
W	.062 / .048	.086 / .082	.133 / .129	.228 / .224	.312 / .308	.133 / .129	.228 / .224

DIMENSIONS IN INCHES UNLESS OTHERWISE SPECIFIED, TOLERANCES - DECIMALS ±.003

(a) DISTANCE BETWEEN END OF SHELL AND POINT AT WHICH A GAGE PIN, HAVING THE SAME BASIC DIAMETER AS THE MATING CONTACT AND A SQUARE FACE, ENGAGES SOCKET CONTACT SPRING.

REFERENCED DOCUMENTS SHALL BE THE ISSUE IN EFFECT ON DATE OF INVITATIONS FOR BID.
THIS STANDARD TAKES PRECEDENCE OVER DOCUMENTS REFERENCED HEREIN.
MATERIALS - SEE PROCUREMENT SPECIFICATION.
FOR MATING AND MOUNTING DETAILS SEE MS24287.

P.A. AIR FORCE - 11
Other Cust

PROCUREMENT SPECIFICATION: MIL-C-26518

SUPERSEDES:

TITLE: CONNECTOR, ELECTRICAL, STYLE S, RACK AND PANEL MINIATURE, CLOSED ENTRY

MILITARY STANDARD

MS27399 (USAF)

SHEET 1 OF 1

FED. SUP CLASS 5935

APPROVED 15 JUN 65 REVISED

DD FORM 1 SEP 61 672-1 (Limited coordination)

PREVIOUS EDITIONS OF THIS FORM ARE OBSOLETE