MILITARY SPECIFICATION SHEET

CONNECTOR, ELECTRICAL, INSERT (INSULATOR), FEMALE RECTANGULAR, POLARIZED, CENTER SCREW LOCK, FOR 56 REMOVABLE CONTACTS

This specification is approved for use by all Departments and Agencies of the Department of Defense.

The complete requirements for acquiring the connectors described herein shall consist of this specification and the latest issue of MIL-C-28731.

INCHES	MM
.043	1.09
.044	1.12
.050	1.27
.070	1.78
.075	1.91
.100	2.54
.120	3.05
.125	3.18
.130	3.30
.140	3.56
.150	3.81
.187	4.75
.234	5.94
.250	6.35
.257	6.53
.265	6.73
.375	9.53
.412	10.46
.469	11.89
.650	16.51
.681	17.30
.803	20.40
.875	22.23
1.140	28.98
1.710	43.43
1.900	48.26
2.280	57.91
2.581	65.56
2.592	65.84
3.187	80.95
3.27	83.1

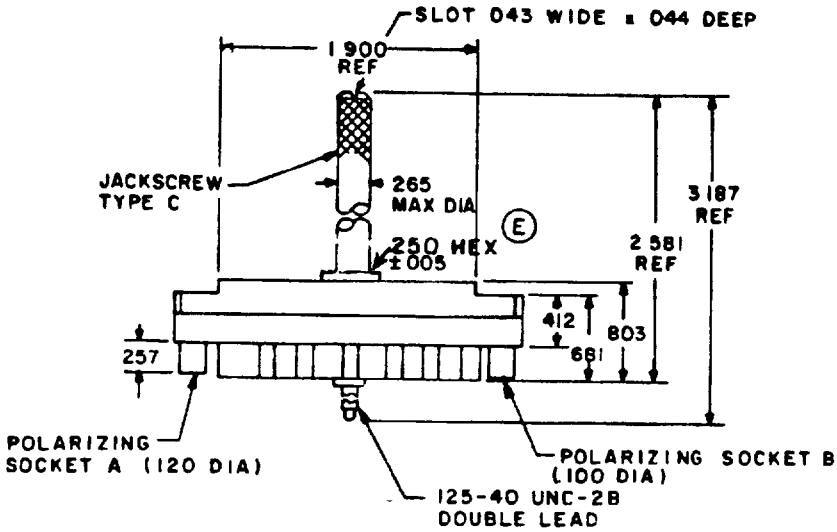

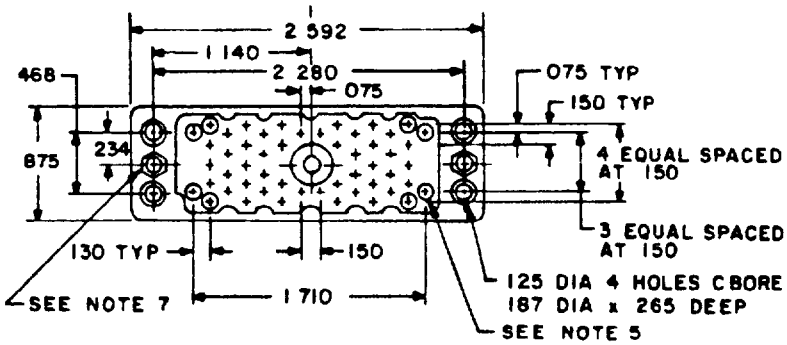

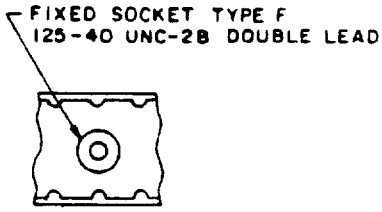

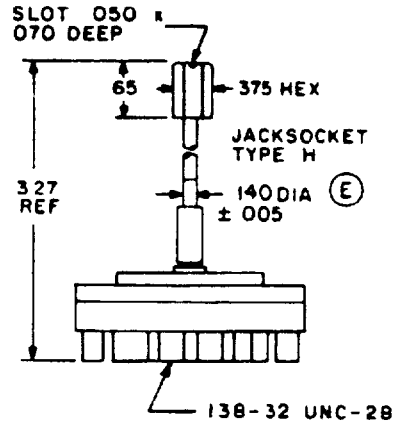

FIGURE 1 Connector, female rectangular.

E denotes changes

FSC 5935

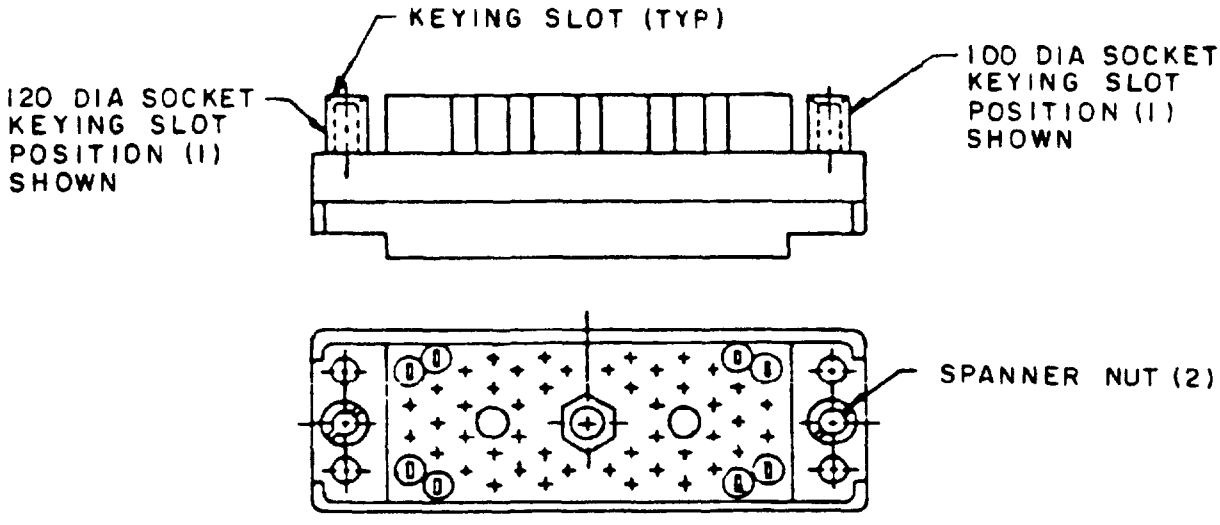

POLARIZING POSITION CHANGE

Keying position on both polarizing pins can be rotated to desired position by loosening spanner nut (counter-clockwise), resetting pin in one of six positions then retightening spanner nut (clockwise).

NOTE Overtightening of spanner nut can fracture connector. Spanner keying wrench shown below.

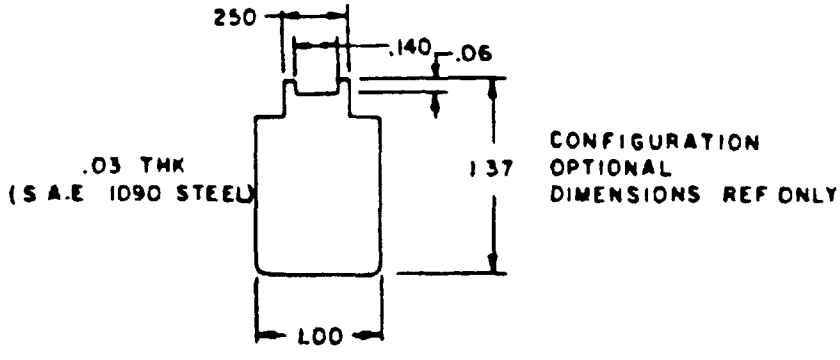

INCHES	MM
.03	0.76
060	1 52
.100	2.54
.120	3.05
.140	3.56
.250	6.35
1.00	25.4
1 37	34.8

SPANNER WRENCH

Configuration A - Connector polarization guide (layout)

FIGURE 1. Connector, female rectangular - Continued.

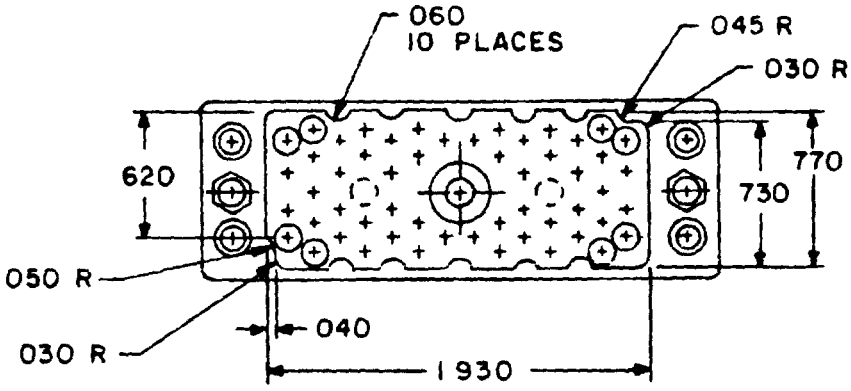

INCHES	MM
.030	0.76
.040	1.02
.045	1.14
.050	1.27
.060	1.52
.620	15.75
.730	18.54
.770	19.56
1.930	49.02

FIGURE 1 Connector, female rectangular - Continued

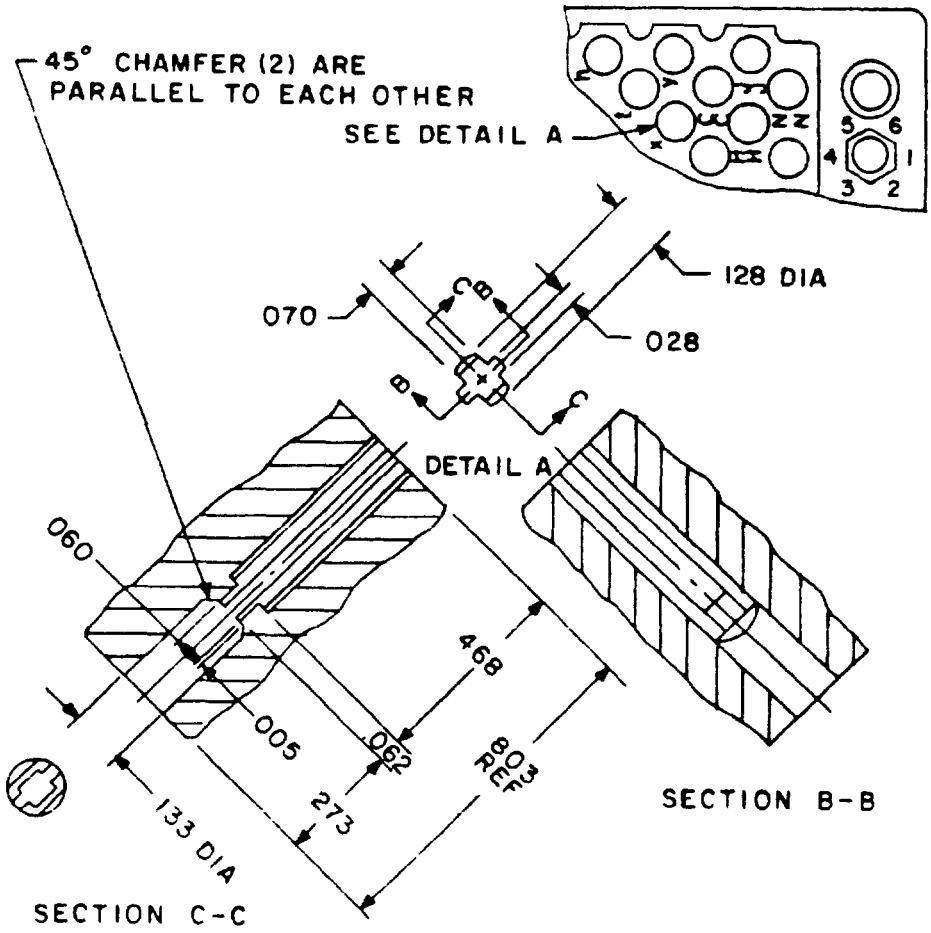

INCHES	MM
.005	0.13
.028	0.71
.060	1.52
.062	1.57
.070	1.78
.128	3.25
.133	3.38
.273	6.93
.468	11.89
.803	20.40

Configuration B - Contact hole detail

FIGURE 1 Connector, female rectangular - Continued

NOTES

1. Dimensions are in inches.
2. Metric equivalents are given for general information only.
3. Tolerances between any two contact centers shall be ±.004 (0.10 mm).
4. Flatness, squareness, and parallelism shall be within dimensional tolerances.
5. Contact hole details shall be in accordance with configuration B.
6. Mating connector information
   M28731/14-0073 and -0075 and mate with M28731/15-0074, -0076 and -0077
   M28731/14-0074, -0076 and -0077 mate with M28731/13-0073 and -0075.
   M28731/14-0078, and -0079 mate with M28731/13-0078, -0079 and -0080.
7. Polarization information.
   Polarization sockets are provided for indexing to preclude intermixing of adjacent connectors. By using a standard type spanner wrench, polarization sockets can be rotated to desired position. For parts supplied directly to the government, polarization will be in the 1-1 position. For other polarization positions see connector polarization guide configuration A (see marking, note 13d). For direct government acquisition a tool is supplied in the unit package for polarization socket adjustment.
8. Contact and terminal designations
   Contacts and terminals shall be designated on the insulator using letters in the location shown on figure 1.
9. Tolerance shall be ±.010 (0.25 mm) unless otherwise specified.
10. Patent notice:
    Patent No. 3,248,686 owned by Elco Corporation. The government has a royalty-free license under the above patent for the benefit of manufacturers of items called for in this specification, either for the government or for use in equipment to be delivered to the government.
11. For direct government acquisition crimp contacts M28731/20-0001 are furnished in a plastic bag in each unit package (see marking, note 13a).
12. For direct government acquisition solder hole and wrappost contacts M28731/25-0001 and /26-0001 are factory installed in connector body (see marking, note 13a).
13. Marking
    a. Connectors supplied directly to the government shall be marked with the military part number (see table I). Example M28731/14-0073.
    b. Connectors supplied with contacts to government end users shall be marked with the military part number (see table I). Example M28731/14-0073
    c. Connectors supplied without contacts to government end users shall be marked as follows Example M28731/14F (screw or socket type from table I). The user shall complete the remaining portion of the military part number as shown in table I based upon contact type he assembles. Example M28731/14F-0074.
    (E) d. Polarization position marking is not required unless otherwise specified When required polarization marking shall be in accordance with the connector polarization guide (see configuration A). The marking shall appear following the part number.
14. Applicable contact insertion and removal tools

    Insertion MIL-I-81969/13-01
    Removal MIL-I-81969/11-01

15. When double wire crimp contact MIL-C-28731/23 is required for use with the connector, it shall be ordered separately
16. Rectangular shields shall conform to MIL-C-28731/19-0007 through -0010, -0017 and -0018 must be ordered separately.
17. Recommended hardware (not furnished) for panel mounting (4) 112-40-UNC-2A (length to suit) bolt with No. 4 washer and mating nut.

FIGURE 1. Connector, female rectangular - Continued.

REQUIREMENTS:

Dimensions and configuration See figure 1.

Mating and unmating forces (torque) 100 inch-ounces, maximum.

Dielectric withstanding voltage 1,250 V rms, 60 Hz, minimum.

Mechanical shock: High impact shock applicable.

Part number See table I.

TABLE I Part number information

Military part number	Actuating hardware	Polarizing socket position A .120 Dia.	Polarizing socket position B .100 Dia.	Contact type
M28731/14-0073	Jackscrew Type C	1	1	Crimp MIL-C-28731/20 1/
M28731/14-0074	Fixed socket Type F	1	1	Crimp MIL-C-28731/20 1/
M28731/14-0075	Jackscrew Type C	1	1	Solder hole MIL-C-28731/25 2/
M28731/14-0076	Fixed socket Type F	1	1	Solder hole MIL-C-28731/25 2/
M28731/14-0077	Fixed socket Type F	1	1	Wrappost MIL-C-28731/26 2/
M28731/14-0078	Jack socket Type H	1	1	Crimp MIL-C-28731/20 1/
M28731/14-0079	Jack socket Type H	1	1	Solder hole MIL-C-28731/25 2/

1/ See figure 1, note 11
2/ See figure 1, note 12

NOTE:
M28731/14-0073 supersedes M28731/14-0001 thru M28731/14-0036.
M28731/14-0074 supersedes M28731/14-0037 thru M28731/14-0072.

Custodians
Army - CR
Navy - EC
Air Force - 85

Review activities
Army - AR, AT, MI
Navy - AS
Air Force - 11, 17, 99
DLA - ES

User activities
Army - AL, AV, ME
Navy - MC, OS
Air Force - 19

Agent
DLA - ES

Preparing activity
Navy - EC

(Project 5935-3488-11)