MIL-C-28731/29B
4 JUNE 1985
SUPERSEDING
MIL-C-28731/29A
25 May 1984

MILITARY SPECIFICATION SHEET

CONNECTORS, ELECTRICAL, INSERT (INSULATOR), MALE RECTANGULAR, POLARIZED, CENTER SCREW LOCK, FOR 75 REMOVABLE TYPE CONTACTS

This specification is approved for use by all Departments and Agencies of the Department of Defense.

The complete requirements for acquiring the connectors described herein shall consist of this specification and the latest issue of MIL-C-28731.

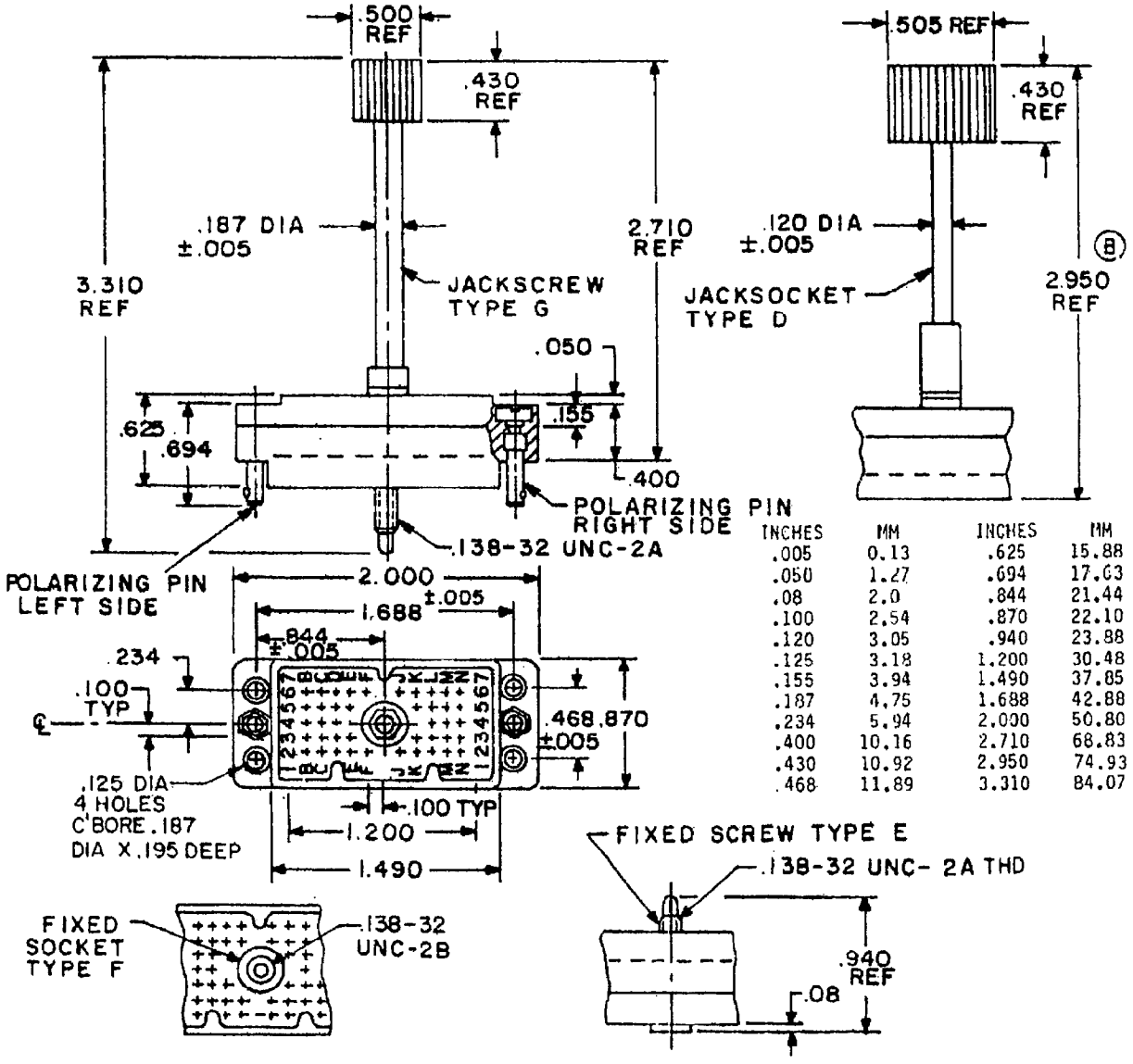

INCHES	MM	INCHES	MM
.005	0.13	.625	15.88
.050	1.27	.694	17.63
.08	2.0	.844	21.44
.100	2.54	.870	22.10
.120	3.05	.940	23.88
.125	3.18	1.200	30.48
.155	3.94	1.490	37.85
.187	4.75	1.688	42.88
.234	5.94	2.000	50.80
.400	10.16	2.710	68.83
.430	10.92	2.950	74.93
.468	11.89	3.310	84.07

FIGURE 1. Connector, male rectangular.

(B) denotes changes

FSC 5935

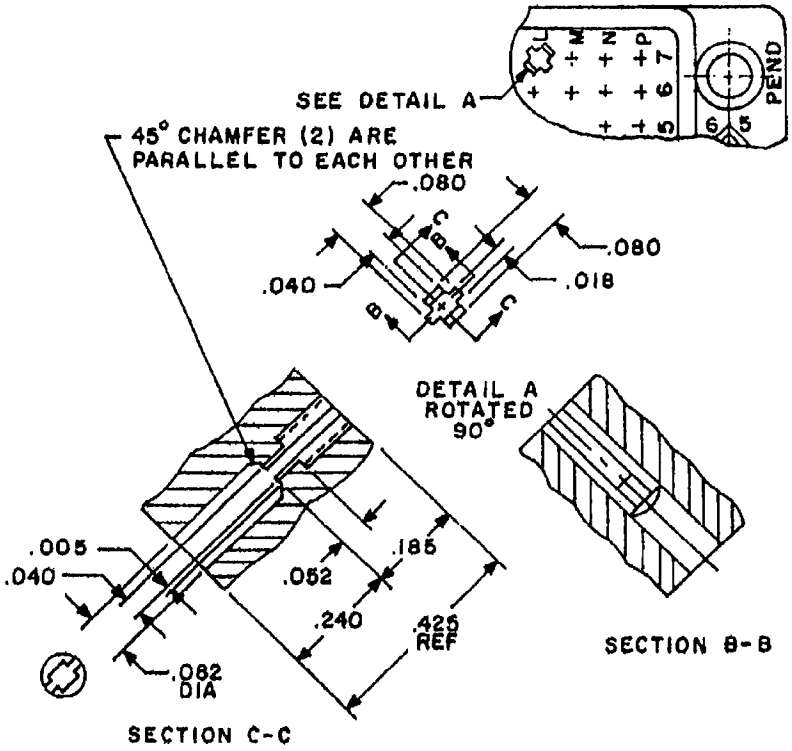

Configuration A - Contact hole detail

INCHES	MM
.005	0.13
.018	0.46
.040	1.02
.052	1.32
.080	2.03
.082	2.08
.185	4.70
.240	6.10
.425	10.80

FIGURE 1. Connector, male rectangular - Continued.

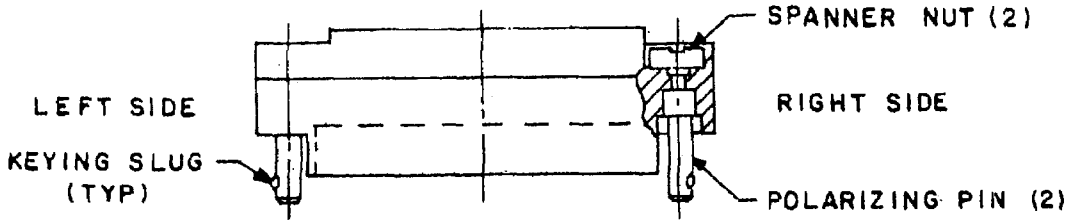

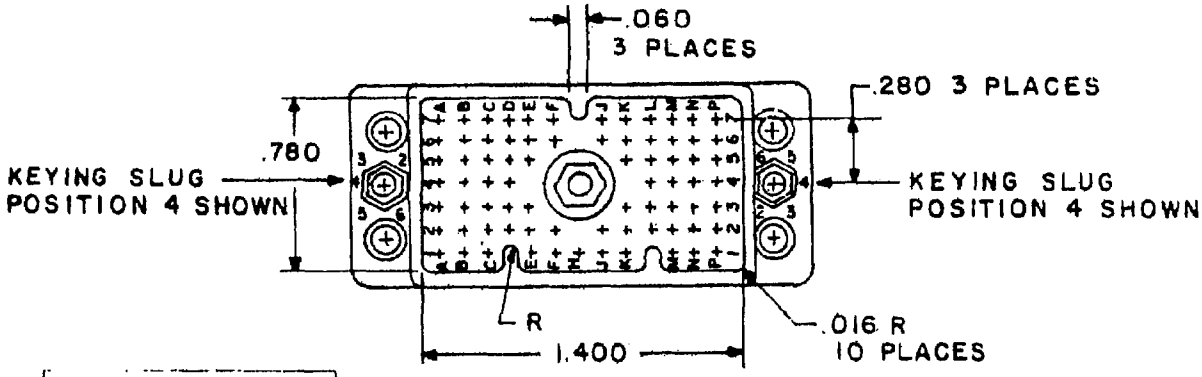

POLARIZING KEY MATING CODE	
P (MALE) Position	R (FEMALE) Position
4	1
5	2
6	3
1	4
2	5
3	6

POLARIZING POSITION CHANGE

Keying position on both polarizing pins can be rotated to desired position by loosening spanner nut (counter-clockwise), resetting pin in one of six positions then retightening spanner nut (clockwise).

NOTE: Overtightening of spanner nut can fracture connector. Spanner keying wrench shown below.

INCHES	MM
.016	0.41
.03	0.8
.055	1.4
.060	1.52
.140	3.56
.250	6.35
.280	7.11
.780	19.81
1.00	25.4
1.37	34.8
1.400	35.50

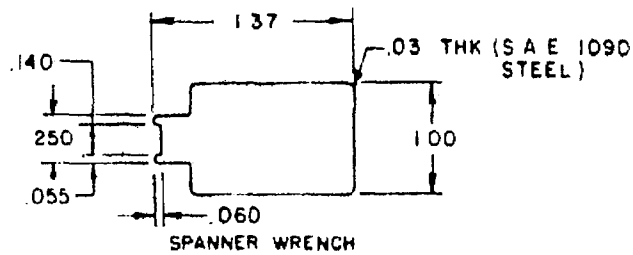

CONFIGURATION OPTIONAL
DIMENSIONS REF. ONLY

Configuration B - Connector polarization guide (layout)

FIGURE 1. Connector, male rectangular - Continued.

NOTES:

1. Dimensions are in inches.
2. Metric equivalents are given for general information only.
3. Tolerances between any two contact centers shall be ±.004 (0.10 mm).
4. Flatness, squareness, and parallelism shall be within dimensional tolerances.
5. Contact hole details shall be in accordance with configuration B.
6. Mating connector information:
   M28731/29-0001 mate with M28731/30-0003 and -0005.
   M28731/29-0002 mate with M28731/30-0004 and -0006.
   M28731/29-0003 and -0005 mate with M28731/30-0001.
   M28731/29-0004 and -0006 mate with M28731/30-0002.
7. Polarization information:
   Polarization pins are provided for indexing to preclude intermixing of adjacent connectors. By using a standard type spanner wrench, polarization pins can be rotated to desired position. For parts supplied directly to the government, polarization will be in the 1-1 position. For other polarization positions see connector polarization guide configuration B (see marking, note 13d). For direct government acquisition a tool is supplied in the unit package for polarization socket adjustment.
8. Contact and terminal designations:
   Contacts and terminals shall be designated on the insulator using letters in the location shown on figure 1.
9. Tolerance shall be ±.010 (0.25 mm) unless otherwise specified.
10. Patent notice:
    Patent No. 3,675,185 owned by Elco Corporation. The government has a royalty-free license under the above patent for the benefit of manufacturers of items called for in this specification, either for the government or for use in equipment to be delivered to the government.
11. For direct government acquisition crimp contacts M28731/35-0001 are furnished in a plastic bag in each unit package (see marking, note 13a).
12. For direct government acquisition wrappost contacts are M28731/36-0001 and are factory installed in connector body (see marking, note 13a).
13. Marking:
    a. Connectors supplied directly to the government shall be marked with the military part number (see table I). Example: M28731/29-0001.
    b. Connectors supplied with contacts to government end users shall be marked with the military part number (see table I). Example: M28731/29-0001.
    c. Connectors supplied without contacts to government end users shall be marked as follows: Example: M28731/29E (screw or socket type from table I). The user shall complete the remaining portion of the military part number as shown in table I based upon contact type he assembles. Example: M28731/29E-0004.
    (B) d. Polarization position marking is not required unless otherwise specified. When required polarization marking shall be in accordance with the connector polarization guide (see configuration B). The marking shall appear following the part number. (B)
14. Applicable contact insertion and removal tools:

    Insertion MIL-I-81969/5-01
    Removal MIL-I-81969/4-02

15. Rectangular shield: Shall conform to MIL-C-28731/19, part number M28731/19-0003 through M28731/19-0006 and -0015, -0016 for type A and B hardware.
16. Recommended hardware (not furnished) for panel mounting: (4) .112-40-UNC-2A (length to suit) bolt with No. 4 washer and mating nut.

FIGURE 1. Connector, male rectangular - Continued.

REQUIREMENTS:

Dimensions and configuration: See figure 1.

Mating and unmating forces (torque): 96 inch-ounces, maximum.

Dielectric withstanding voltage: 1,000 volts rms (sea level).

Mechanical shock (specified pulse): Applicable.

Contact retention: 6 pounds.

Contact separation force: 1 ounce, minimum.

Contact current rating: 5 amperes, 22 AWG wire.

Part number: See table I.

TABLE I. Part number information.

Military part number	Actuating hardware	Polarizing pin position		Contact type
		Left side	Right side	
M28731/29-0001	Jackscrew Type G	4	4	Crimp, MIL-C-28731/35 1/
M28731/29-0002	Jack socket Type D	4	4	Crimp, MIL-C-28731/35 1/
M28731/29-0003	Fixed socket Type F	4	4	Crimp, MIL-C-28731/35 1/
M28731/29-0004	Fixed screw Type E	4	4	Crimp, MIL-C-28731/35 1/
M28731/29-0005	Fixed socket Type F	4	4	Wrappost, MIL-C-28731/36 2/
M28731/29-0006	Fixed screw Type E	4	4	Wrappost, MIL-C-28731/36 2/

1/ See figure 1, note 11
2/ See figure 1, note 12

Custodians:
Army - CR
Navy - EC
Air Force - 85

Review activities:
Army - AR, AT, MI
Navy - AS
Air Force - 11, 17, 99
DLA - ES

User activities:
Army - AL, AV, ME
Navy - MC, OS
Air Force - 19

Agent:
DLA - ES

Preparing activity:
Navy - EC

(Project 5935-3488-21)