MILITARY SPECIFICATION SHEET

CONNECTOR, ELECTRICAL, INSERT (INSULATOR), MALE RECTANGULAR, POLARIZED, CENTER SCREW LOCK, FOR 20 REMOVABLE CONTACTS

This specification is approved for use by all Departments and Agencies of the Department of Defense.

The requirements for acquiring the connectors described herein shall consist of this specification and the latest issue of MIL-C-28731.

Inches	mm
005	0 13
044	1 12
046	1 17
075	1 90
076	1 93
086	2 18
093	2 36
109	2 77
140	3 56
147	3 73
150	3 81
175	4 44
198	5 03
205	5 21
400	10 16
410	10.41
412	10 46
500	12 70
562	14 27
681	17.30
686	17 42
750	19 05
798	20 27
800	20.32
920	23 37
1 000	25 40
1 125	28 58
1 312	33 32
2 139	54 33
2 593	65 86

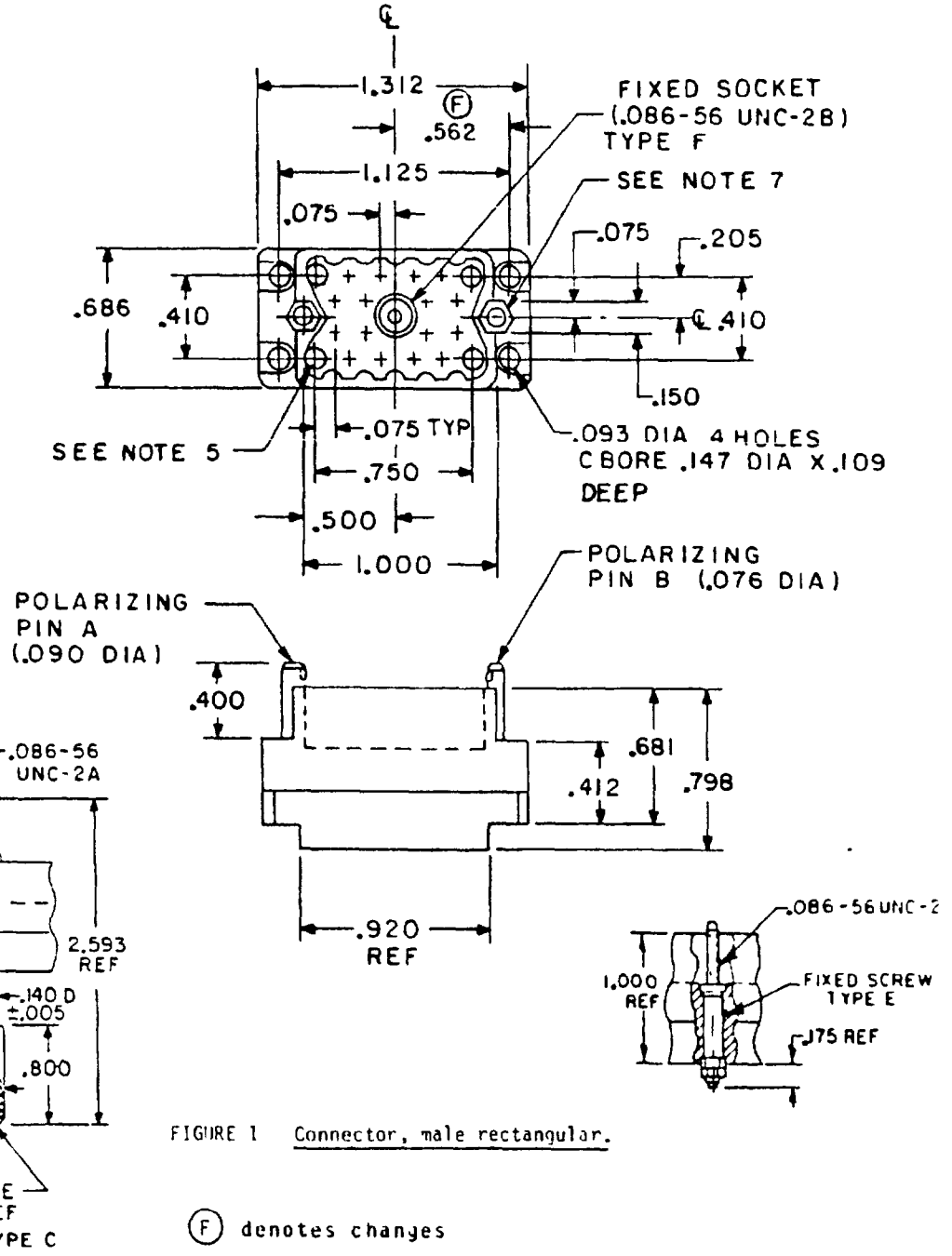

FIGURE 1 Connector, male rectangular.

(F) denotes changes

DISTRIBUTION STATEMENT A. Approved for public release; distribution is unlimited.

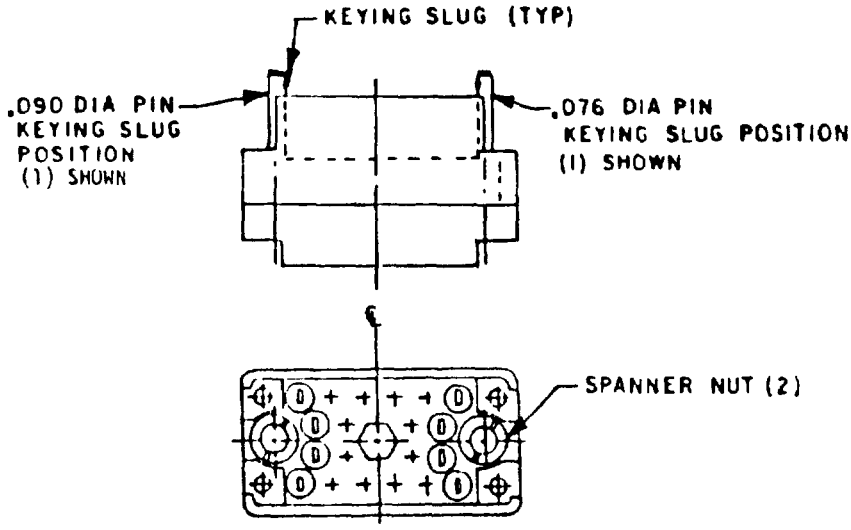

POLARIZING POSITION CHANGE

Keying position on both polarizing pins can be rotated to desired position by loosening spanner nut (counter-clockwise), resetting pin in one of six positions then retightening spanner nut (clockwise)

NOTE: Overtightening of spanner nut can fracture connector. Spanner keying wrench shown below.

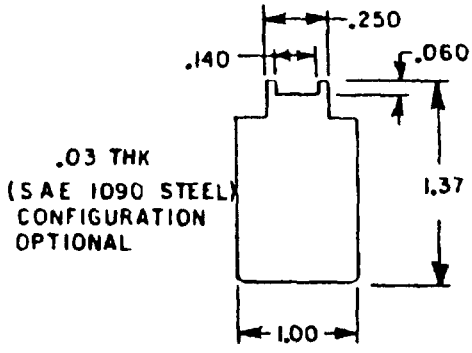

ALL DIMENSIONS ARE FOR REFERENCE ONLY

Inches	mm
.03	0 8
060	1.52
076	1 93
090	2 29
.137	3.48
.140	3 56
250	6 35
1.00	25 4
1.37	34.8

SPANNER WRENCH

Configuration A - Connector polarization guide (layout)

FIGURE 1. Connector, male rectangular - Continued.

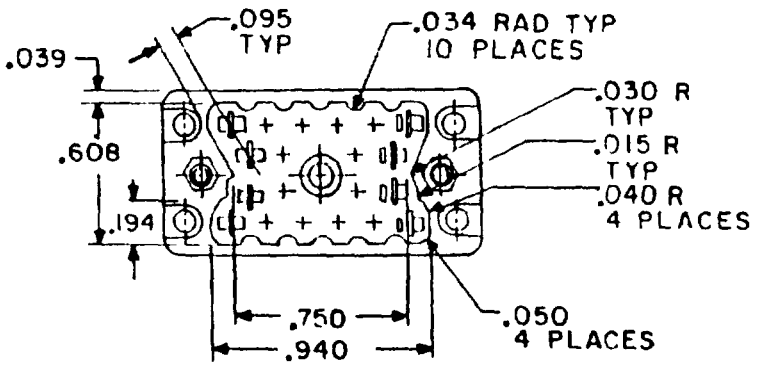

Inches	mm
015	0 38
025	0 64
030	0 76
034	0 86
035	0 89
039	0 99
040	1 02
.050	1 27
.095	2 41
158	4 01
.168	4 27
194	4 93
608	15.44
750	19 05
940	23 88

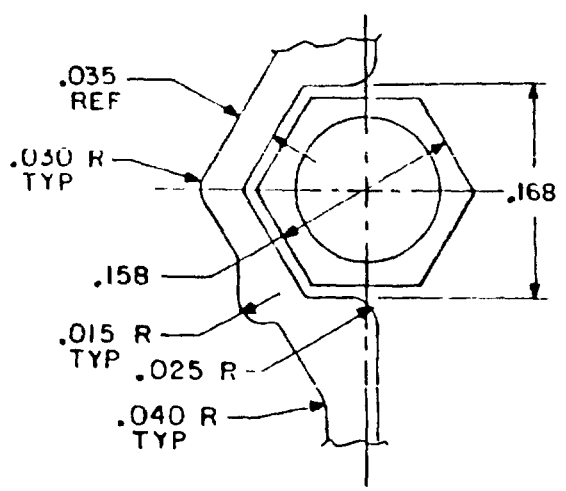

FIGURE 1. Connector, male rectangular - Continued.

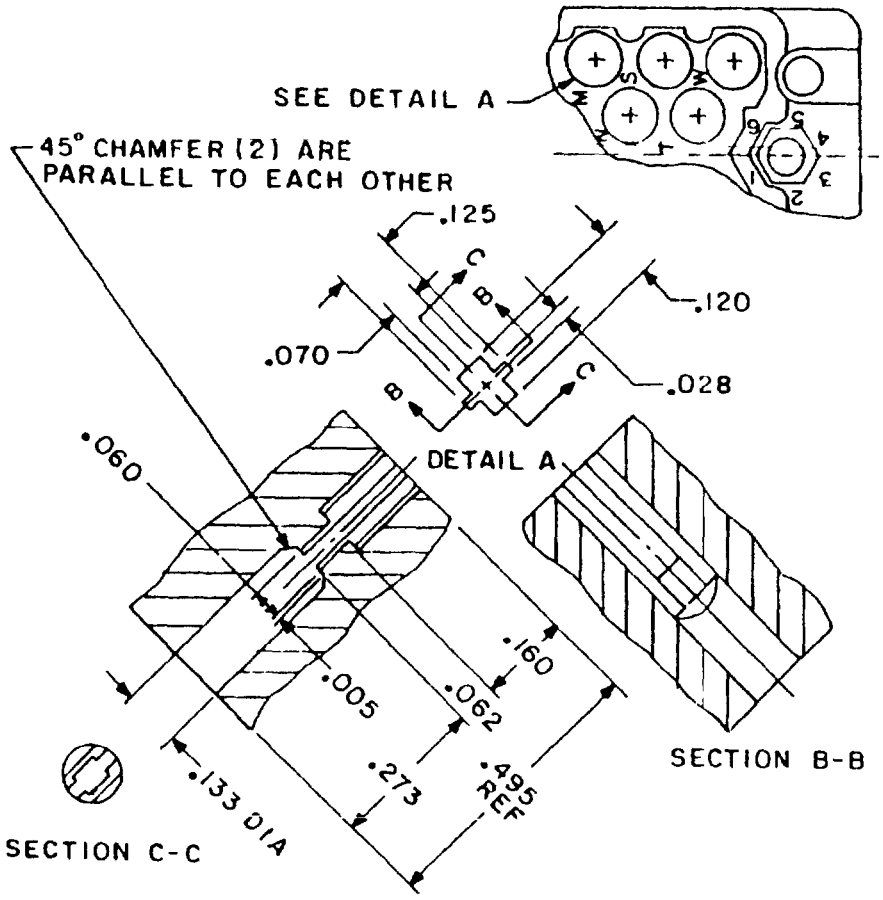

Configuration B - Contact hole detail

Inches	mm
005	0 13
028	0 71
060	1 52
062	1 57
070	1 78
120	3 05
125	3 18
133	3 38
160	4 06
273	6 93
495	12.57

FIGURE 1 Connector, male rectangular - Continued.

NOTES.

1. Dimensions are in inches.
2. Metric equivalents are given for general information only.
3. Tolerances between any two contact centers shall be ± .004 (0.10 mm).
4. Flatness, squareness, and parallelism shall be within dimensional tolerances.
5. Contact hole details shall be in accordance with configuration B.
6. Mating connector information
   M28731/9-0109, and -0112 and mate with M28731/10-0110, -0113 and -0115.
   M28731/9-0110, -0113 and -0115 mate with M28731/10-0109 and -0112.
   M28731/9-0111, -0114 and -0116 mate with M28731/10-0111 and 0114.
7. Polarization information
   Polarization pins are provided for indexing to preclude intermixing of adjacent connectors. By using a standard type spanner wrench, polarization pins can be rotated to desired position. For parts supplied directly to the government, polarization will be in the 1-1 position. For other polarization positions see connector polarization guide configuration A (see marking, note 13d). For direct government acquisition a tool is supplied in the unit package for polarization socket adjustment.
8. Contact and terminal designations:
   Contacts and terminals shall be designated on the insulator using letters in the location shown on figure 1.
9. Tolerance shall be ±.010 (0.25 mm) unless otherwise specified.
10. Patent notice:
    Patent No. 3,248,686 owned by Elco Corporation. The government has a royalty-free license under the above patent for the benefit of manufacturers of items called for in this specification, either for the government or for use in equipment to be delivered to the government.
11. For direct government acquisition crimp contacts M28731/20-0001 are furnished in a plastic bag in each unit package (see marking, note 13a).
12. For direct government acquisition solder hole and wrappost contacts M28731/25-0001 and /26-0001 are factory installed in connector body (see marking, note 13a).
13. Marking
    a. Connectors supplied directly to the government shall be marked with the military part number (see table I). Example M28731/9-0110.
    b. Connectors supplied with contacts to government end users shall be marked with the military part number (see table I) Example M28731/9-0110.
    c. Connectors supplied without contacts to government end users shall be marked as follows Example. M28731/9F (screw or socket type from table I). The user shall complete the remaining portion of the military part number as shown in table I based upon contact type he assembles. Example M28731/9F-0110
    d. Polarization position marking is not required unless otherwise specified. When required polarization marking shall be in accordance with the connector polarization guide (see configuration A). The marking shall appear following the part number.
14. Applicable contact insertion and removal tools

    Insertion MIL-I-81969/13-01
    Removal MIL-I-81969/11-01

15. When double wire crimp contact MIL-C-28731/23 is required for use with the connector, it shall be ordered separately.
16. Rectangular shields shall conform to MIL-C-28731/19-0001 or -0002 and must be ordered separately.
17. Recommended hardware (not furnished) for panel mounting: (4) .086-56-UNC-2A (length to suit) bolt with No 2 washer and mating nut.

FIGURE 1. Connector, male rectangular - Continued.

REQUIREMENTS

Dimensions and configuration See figure 1.

Mating and unmating forces (torque) 35 inch-ounces, maximum.

Dielectric withstanding voltage. 1,250 V rms, 60 Hz, minimum.

Mechanical shock. High impact shock applicable.

Part number. See table I.

TABLE I. Part number information.

Military part number	Actuating hardware	Polarizing pin position		Contact type
		A .090 Dia.	B .076 Dia.	
M28731/9-0109	Jackscrew Type C	1	1	Crimp MIL-C-28731/20 1/
M28731/9-0110	Fixed socket Type F	1	1	Crimp MIL-C-28731/20 1/
M28731/9-0111	Fixed screw Type E	1	1	Crimp MIL-C-28731/20 1/
M28731/9-0112	Jackscrew Type C	1	1	Solder hole MIL-C-28731/25 2/
M28731/9-0113	Fixed socket Type F	1	1	Solder hole MIL-C-28731/25 2/
M28731/9-0114	Fixed screw Type E	1	1	Solder hole MIL-C-28731/25 2/
M28731/9-0115	Fixed socket Type F	1	1	Wrappost MIL-C-28731/26 2/
M28731/9-0116	Fixed screw Type E	1	1	Wrappost MIL-C-28731/26 2/

1/ See figure 1, note 11
2/ See figure 1, note 12

NOTE.
M28731/9-0109 supersedes M28731/9-0001 thru M28731/9-0036.
M28731/9-0110 supersedes M28731/9-0037 thru M28731/9-0072.
M28731/9-0111 supersedes M28731/9-0073 thru M28731/9-0108.

Custodians:
Army - CR
Navy - EC
Air Force - 85

Review activities.
Army - AR, AT, MI
Navy - AS
Air Force - 11, 17, 99
DLA - ES

User activities
Army - AL, AV, ME
Navy - MC, OS
Air Force - 19

Preparing activity
Navy - EC

Agent:
DLA - ES

(Project 5935-3653-01)