INCH-POUND

MIL-C-28748/5D
25 March 1993
SUPERSEDING
MIL-C-28748/5C
30 November 1981

MILITARY SPECIFICATION SHEET

CONNECTORS, ELECTRICAL RECTANGULAR, RACK AND PANEL,
SOLDER TYPE PIN CONTACTS, SIZE 20

This specification is approved for use by all Departments and Agencies of the department of Defense.

The requirements for acquiring the product described herein shall consist of this specification sheet and the issue of the following specification listed in that issue of the Department of Defense Index of Specifications and Standards (DODISS) specified in the solicitation: MIL-C-28748.

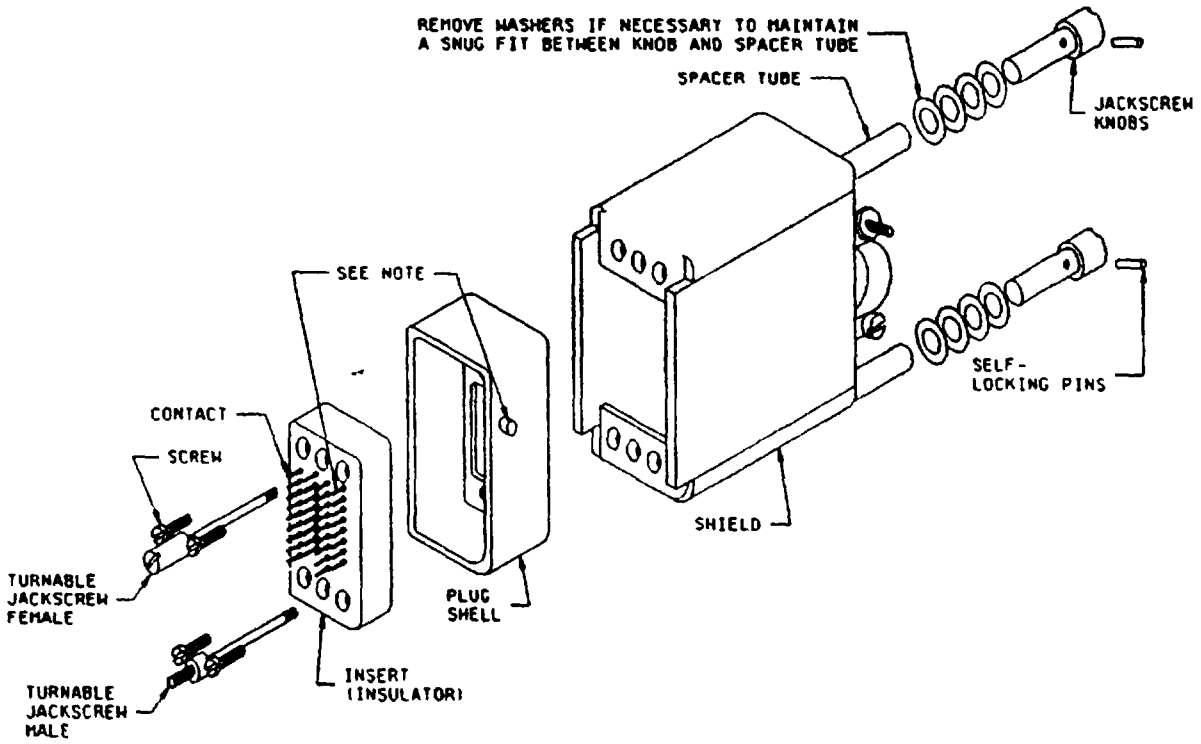

Note The polarization feature (pin) on the plug shell shall be adjacent to the side closest to the number 1 or A contact position

Connector

Configuration A

FIGURE 1 Connector with shields, jackscrews, and guidepins

DISTRIBUTION STATEMENT A Approved for public release, distribution is unlimited

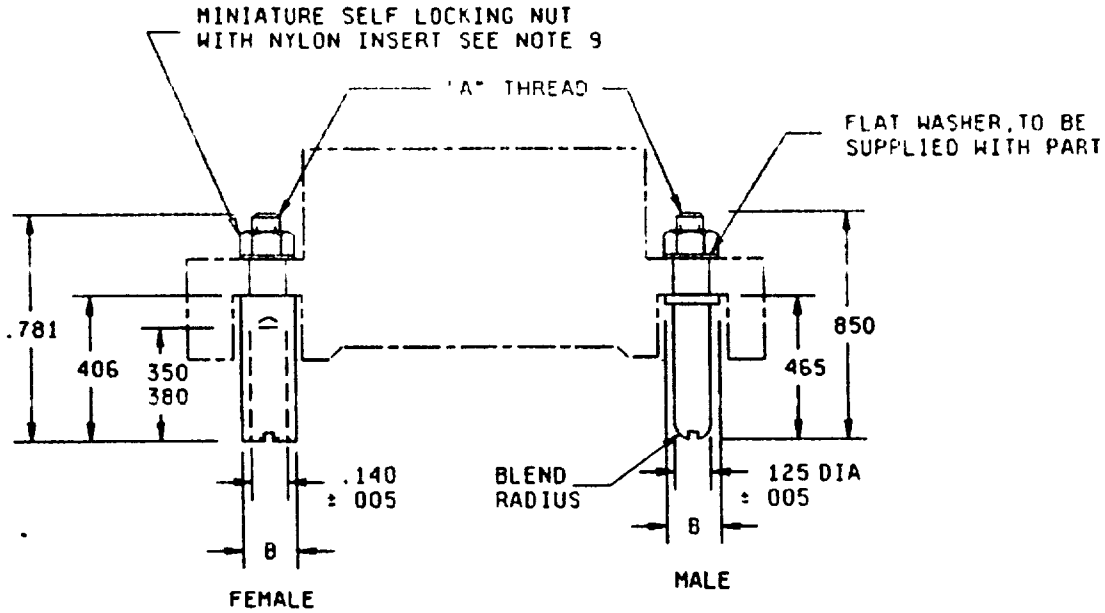

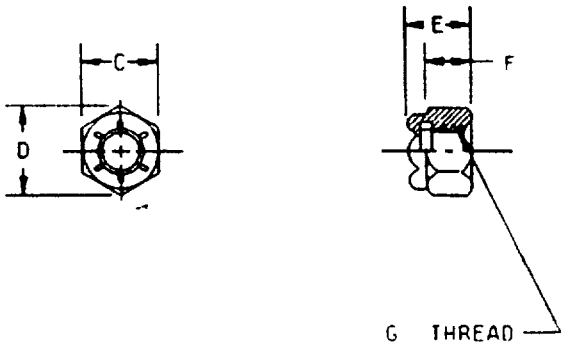

Connector size (no of contacts)	A thread	B dia max	C max min	D ref	E max min	F ref	G thread
7 through 75	114-40 UNC-2A	190 (4 82)	190 (4 82) 181 (4 59)	205 (5 20)	125 (3 17) 095 (2 41)	070 (1 77)	112-40 UNC-3B
104	138-32 UNC-2A	190 (4 82)	252 (6 40) 240 (6 90)	275 (6 98)	153 (3 88) 133 (3 37)	081 (2 05)	138-32 UNC-3B

Connector with guidepins

Configuration B

FIGURE 1 Connector with shields, jackscrews, and guidepins - Continued

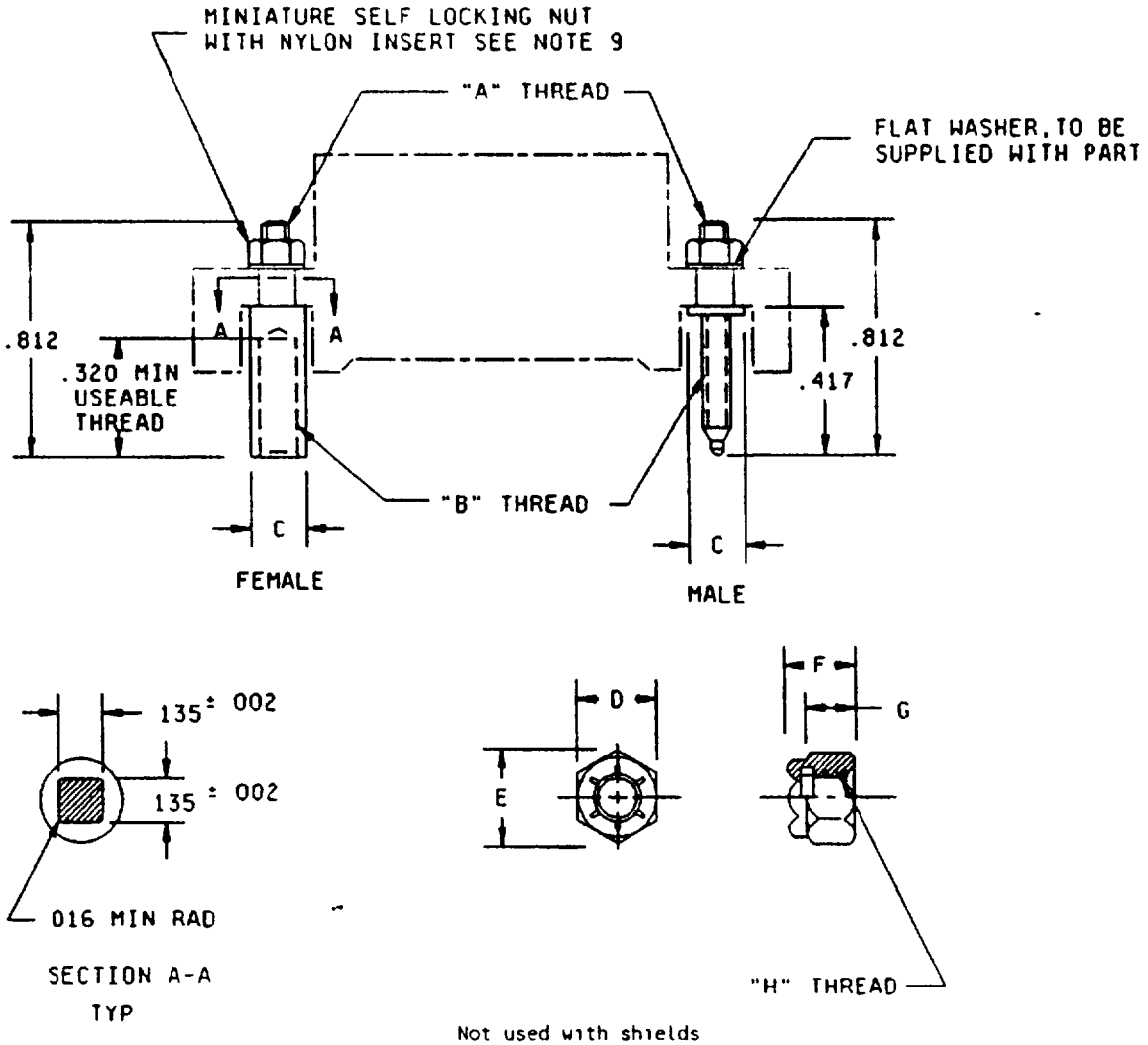

Not used with shields

Connector size (no of contacts)	A thread	B thread class 2	C dia max	D max min	E ref	F max min	G ref	H thread
7 through 75	112-40 UNC-2A	138-32 UNC	190 (4.82)	.190 (4 82) 095 (2 41)	205 (5 20)	125 (3 17) 095 (2 41)	070 (1 77)	112-40 UNC-3B
104	138-40 UNC-2A	164-32 UNC	225 (5 63)	252 (6 40) 240 (6 09)	275 (6 98)	153 (1 35) 133 (3 37)	081 (2 05)	138-32 UNC-3B

Connector with fixed jackscrews

Configuration C

FIGURE 1 Connector with shields, jackscrews, and guidepins - Continued

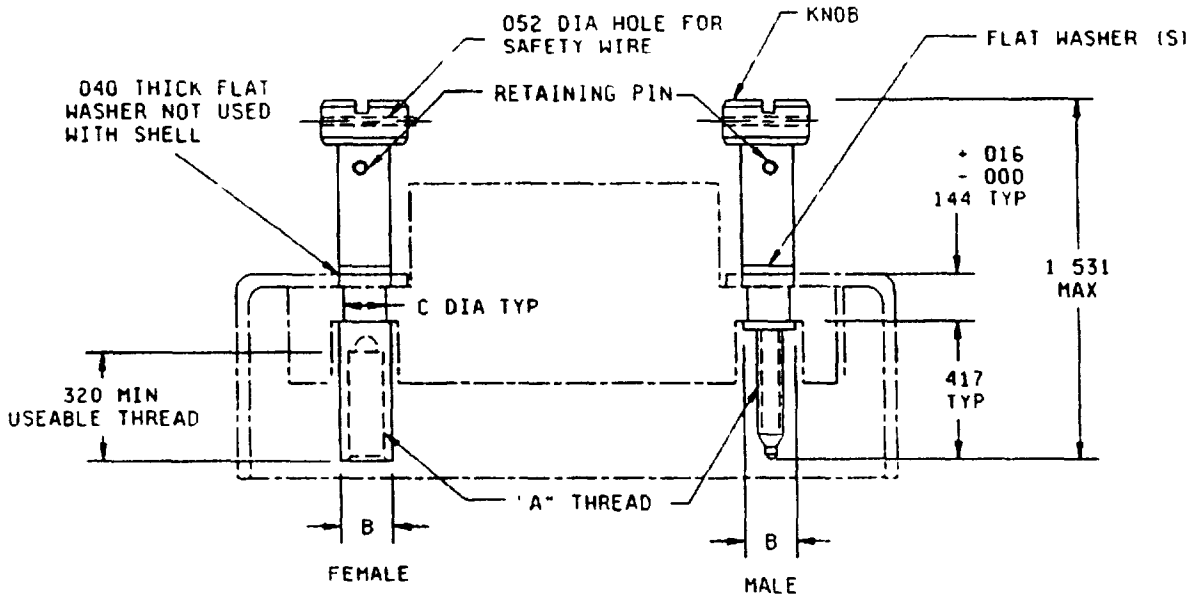

Not used with shields

Connector size (no of contacts)	A thread class 2	B dia. max	C dia ± 003
7 through 75	138-32 UNC	190 (4 82)	115 (2 92)
104	164-32 UNC	225 (5 71)	137 (4 48)

Connector with short turnable jackscrews

Configuration D

FIGURE 1 Connector with shields, jackscrews, and guidepins - Continued

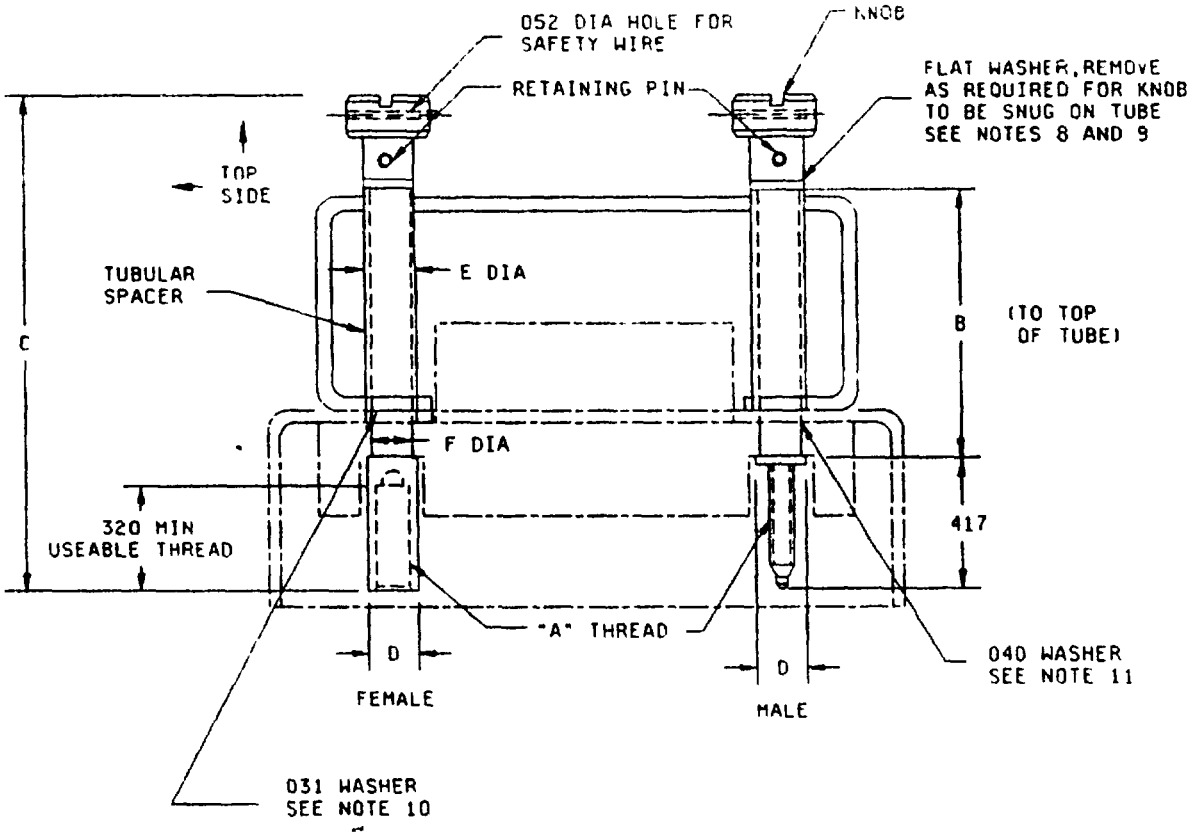

Multipiece construction

For use with shield, configuration A, insert designator A through E, and configuration B, insert designator F through J. Plug shell, insert designator A through K, and receptacle shell, insert designator A through K

Connector size (no of contacts)	A thread class 2	B	C max	D dia max	E dia ± 004 (0 10)	F dia ± 003 (0 07)
7 through 75	138-32 UNC	1 500 (38 10)	2 467 (62 66)	190 (4 82)	188 (4 77)	115 (2 91)
104	164-32 UNC	2 495 (63 37)	3 438 (87 32)	225 (5 71)	219 (5 56)	137 (3 47)

Connector with long turnable jackscrews and shield

Configuration E

FIGURE 1 Connector with shields, jackscrews, and guidepins - Continued

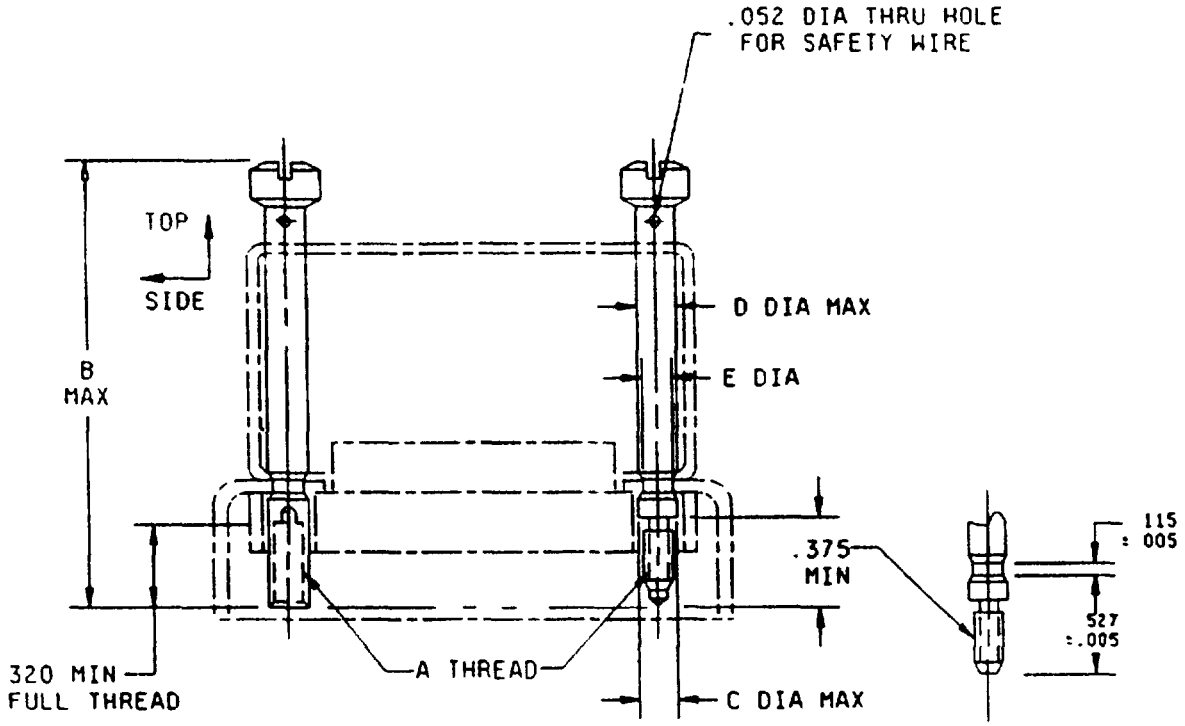

One piece construction

For use with shield configurations A and B, insert designators L through Q For use with plug and receptacle shells, insert designator L through Q

When plug or receptacle shells, insert designators L through Q are required to be used with a shield, use with shield configuration A, insert designators A through E or shield configuration B, insert designator K

Connector size (no of contacts)	A thread class 2	B max	C dia max	D dia max	E dia ± 002 (0 05)
34, 42 50, 75	138 32 UNC	2 438 (61 93)	192 (4 88)	192 (4 88)	111 (2 82)
104	164-32 UNC	3 282 (83 36)	225 (5 72)	225 (5 72)	140 (3 56)

Connector with long turnable jackscrews and shield

Configuration F

FIGURE 1 Connector with shields, jackscrews, and guidepins continued

Inches	mm	Inches	mm	Inches	mm
002	0.05	.137	3 48	.350	8.89
.003	0.08	138	3.51	380	9.65
.004	0 10	140	3.56	406	10.31
005	0 13	144	3 60	417	10 59
016	0 41	153	3 89	465	11.81
031	0 79	.181	4.60	781	19.84
040	1 02	188	4 78	812	20.62
.052	1 32	190	4 83	850	21 59
.070	1 78	205	5 21	1 500	38 10
081	2 06	219	5 56	1 531	38 88
095	2.41	225	5 72	2.467	62 66
115	2 92	240	6 10	2 495	63.37
125	3 18	252	6 40	3 438	87 33
133	3.38	272	6 91		
135	3 43	320	8 13		

NOTES

1 Dimensions are in inches
2 Metric equivalents are given for general information only
3 Unless otherwise specified, tolerance is ± 016 (0 41 mm)
4 Dimensions and configuration shall be in accordance with above figure
5 Fixed jackscrews configuration C may have 005 (0 13 mm) minimum vertical float
6 Materials for jackscrews and guidepins Corrosion-resistant steel in accordance with QQ-S-763, class 302, 303, 303Se, 304 or 316, ASTM A484, or ASTM A582 except for aluminum alloy knob, tubular spacer, and 040 (1 02 mm) washer
7 Finish passivated in accordance with QQ-P-35 except for anodized knob on multipiece construction
8 Lubricant Solid film lubricant or "A" thread conforming to MIL-L-46010
9 Miniature self-locking nut with nylon insert shall be in accordance with notes 6 and 7
10 Washer 031 (0 79 mm) thick, not used with shields 20 and smaller
11 Washer 040 (1 02 mm) thick supplied with all sizes, not used with shell

FIGURE 1 Connector with shields, jackscrews, and guidepins Continued

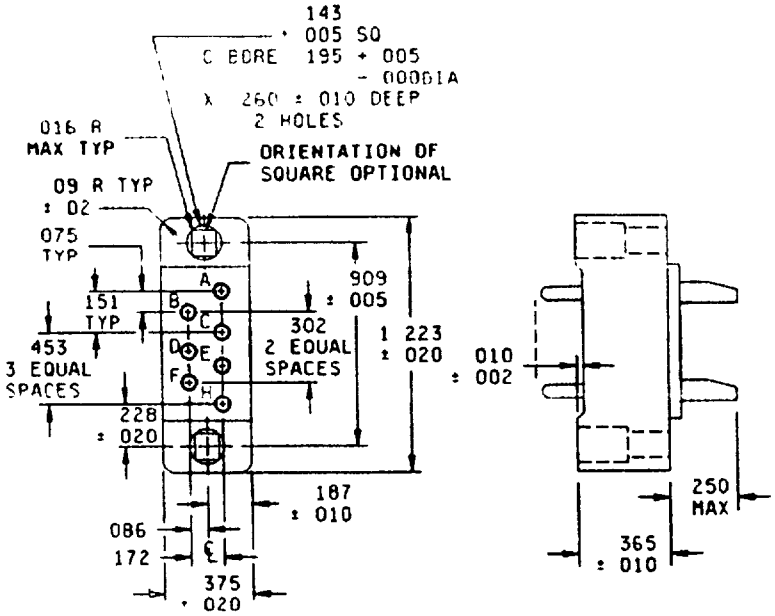

Insert with 7 contacts

Configuration A

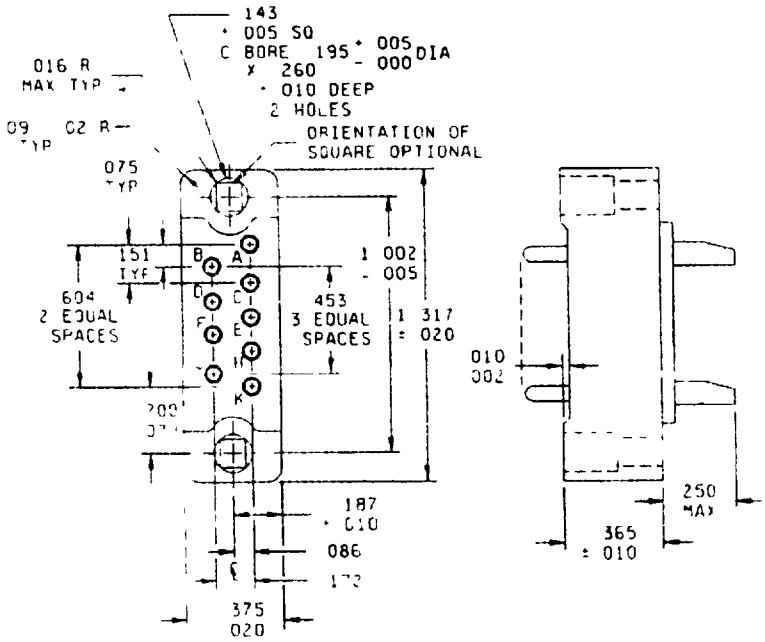

Insert with 9 contacts

Configuration B

FIGURE 2 Insert arrangements

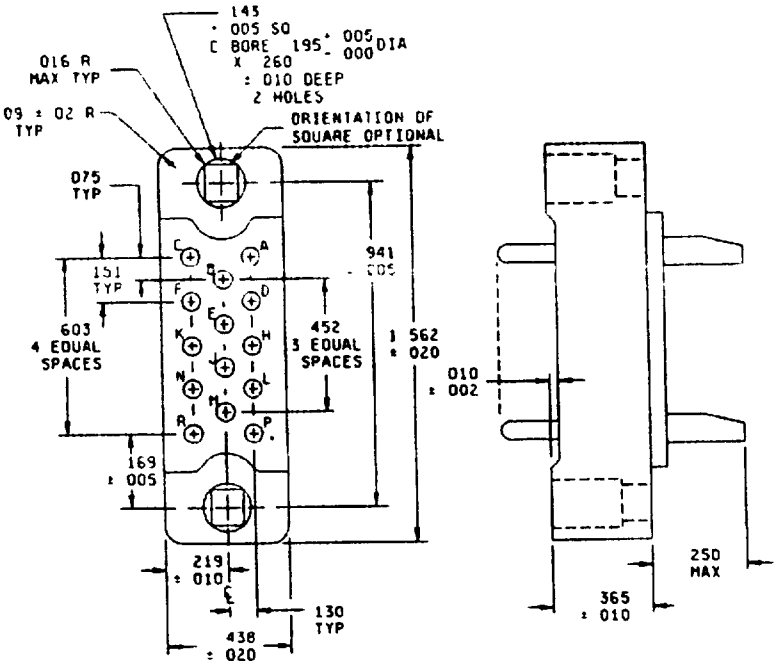

Insert with 14 contacts

Configuration C

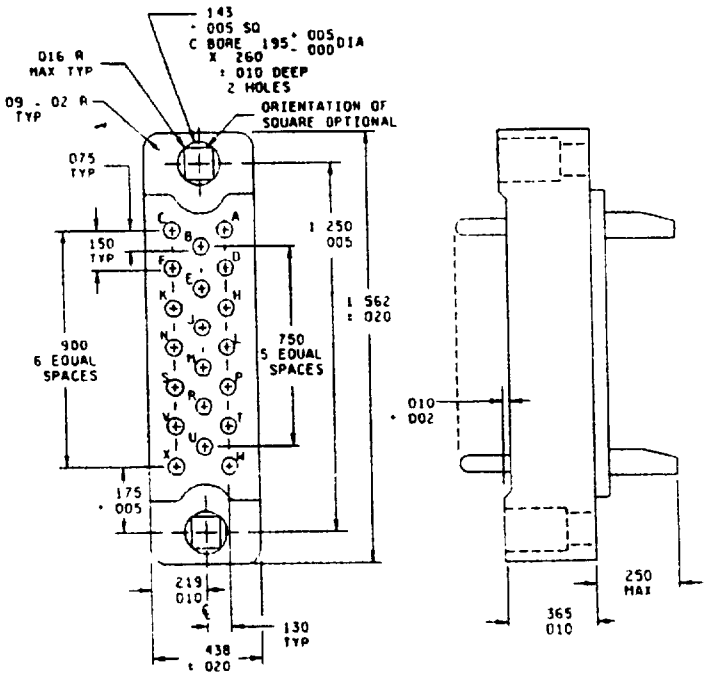

Insert with 20 contacts

Configuration D

FIGURE 2 Insert arrangements - Continued

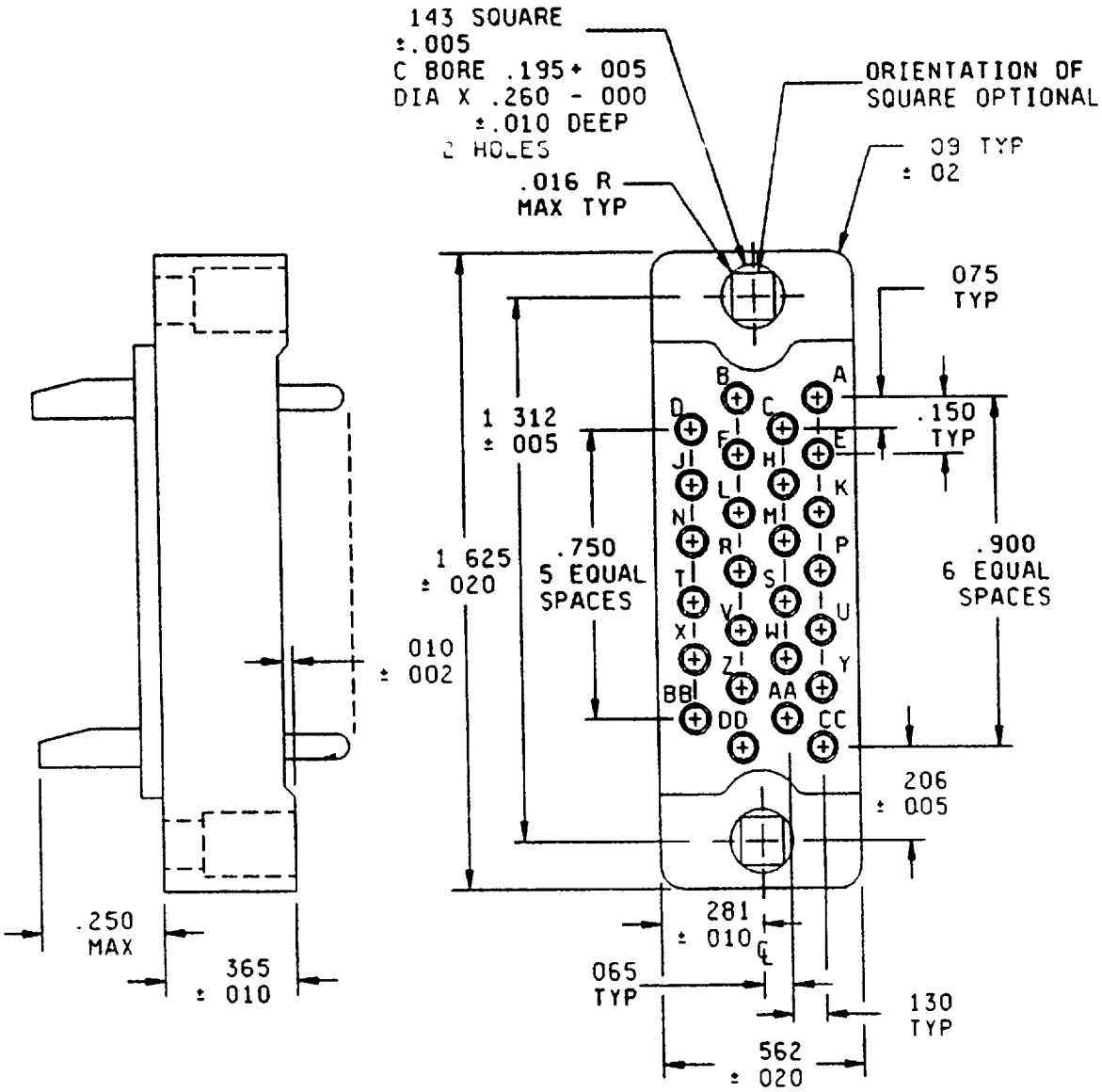

Insert with 26 contacts

Configuration E

FIGURE 2 Insert arrangements - Continued

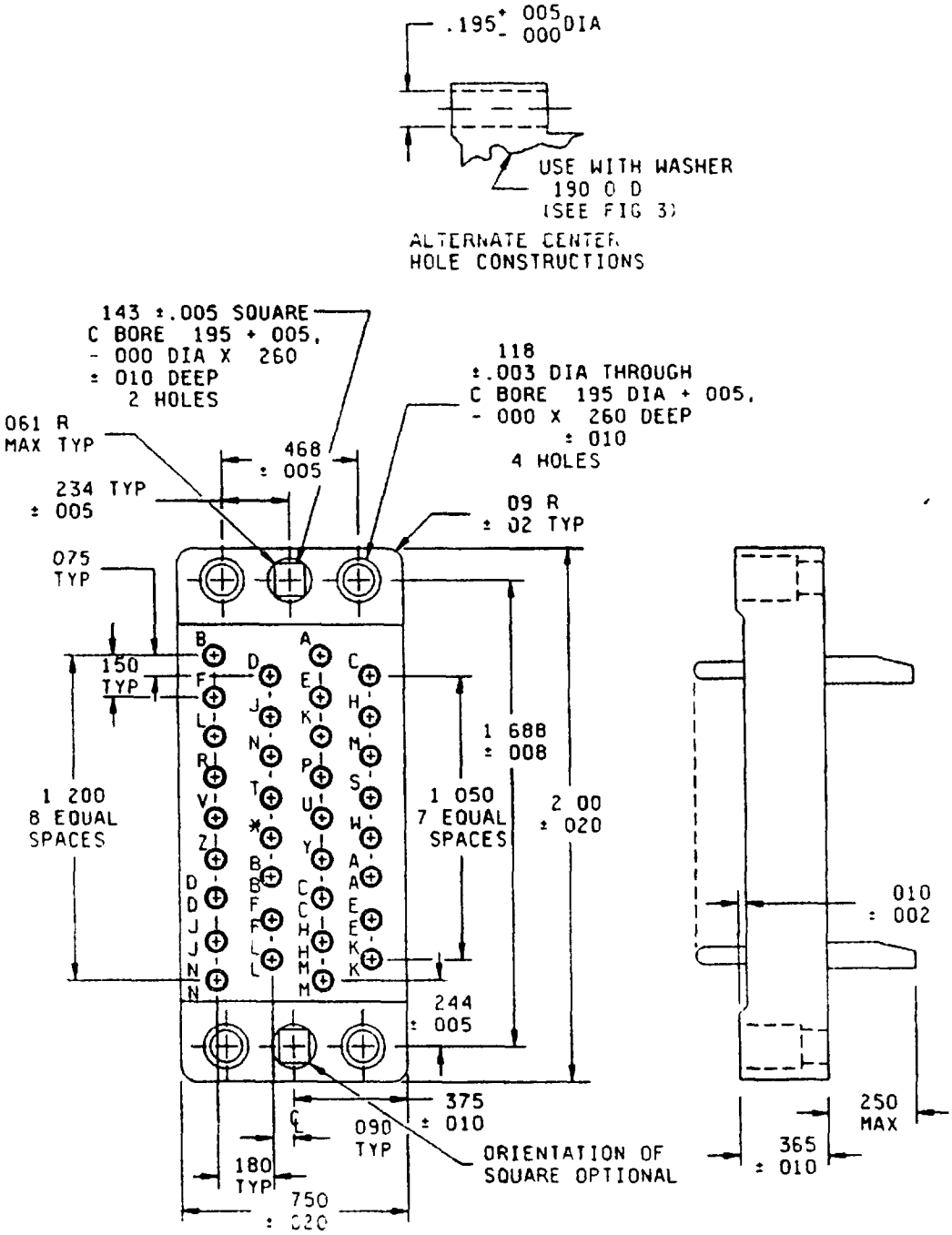

Configuration Q (X) for long jackscrews and hood only (thru hole alternate construction)

Insert with 34 contacts

Configurations F (W) and Q (X)

FIGURE 2 Insert arrangements - Continued

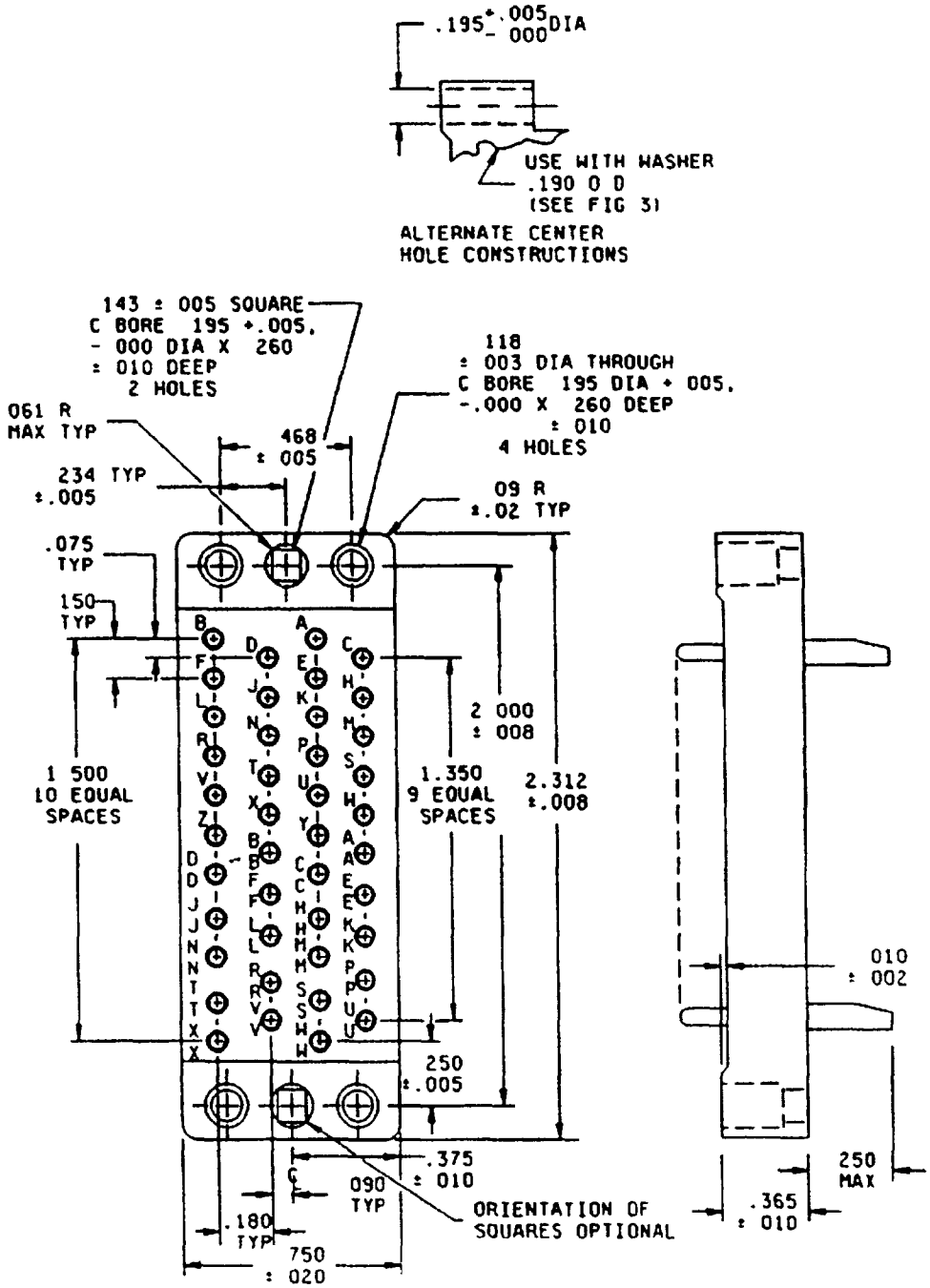

Configuration P (Z) for long jackscrews and hood only (thru hole alternate construction)

Insert with 42 contacts

Configurations G (Y) and P (Z)

FIGURE 2 Insert arrangements - Continued

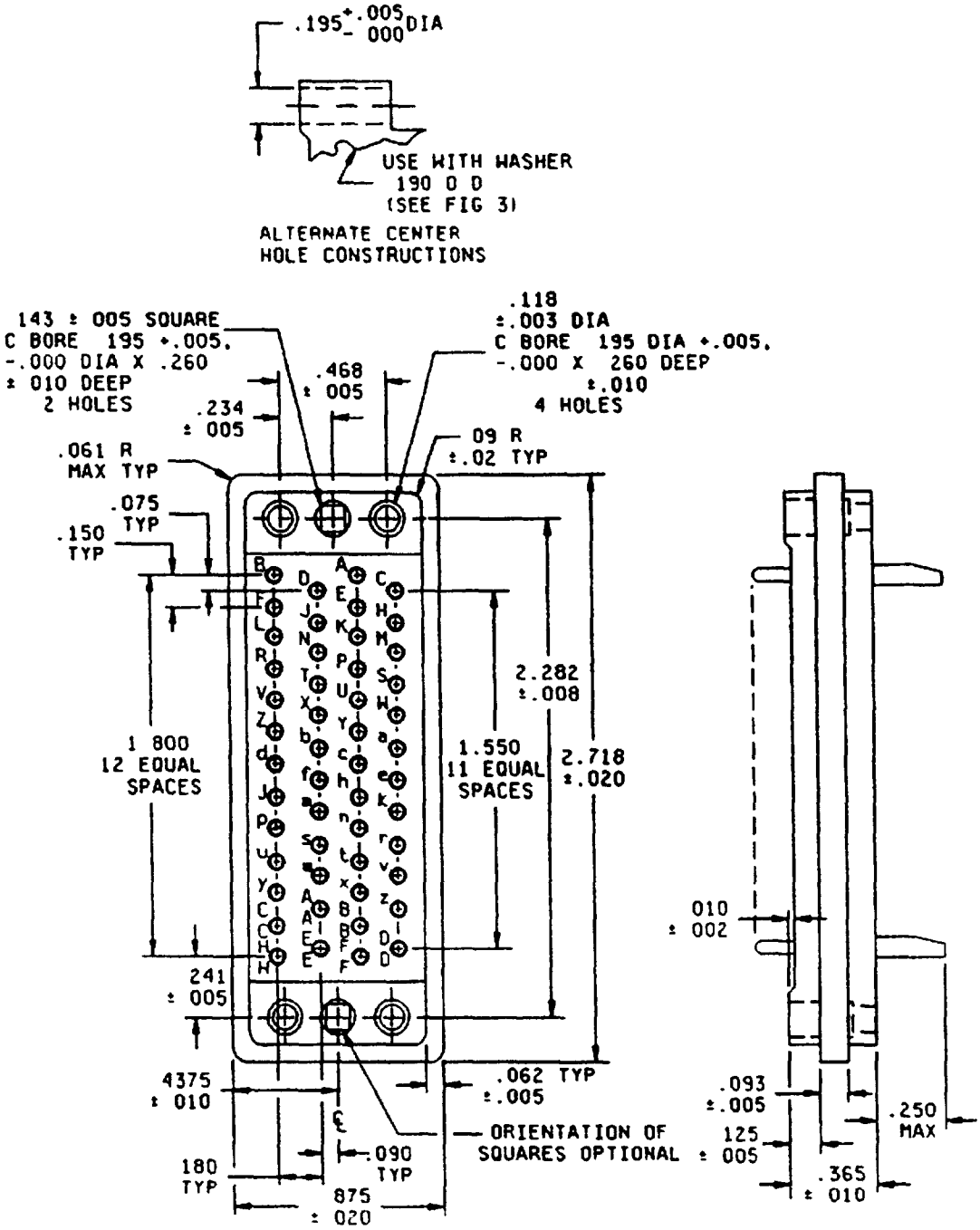

Configuration N (2) for long jackscrews and hood only (thru hole alternate construction)

Insert with 50 contacts

Configurations H (1) and N (2)

FIGURE 2 Insert arrangements - Continued

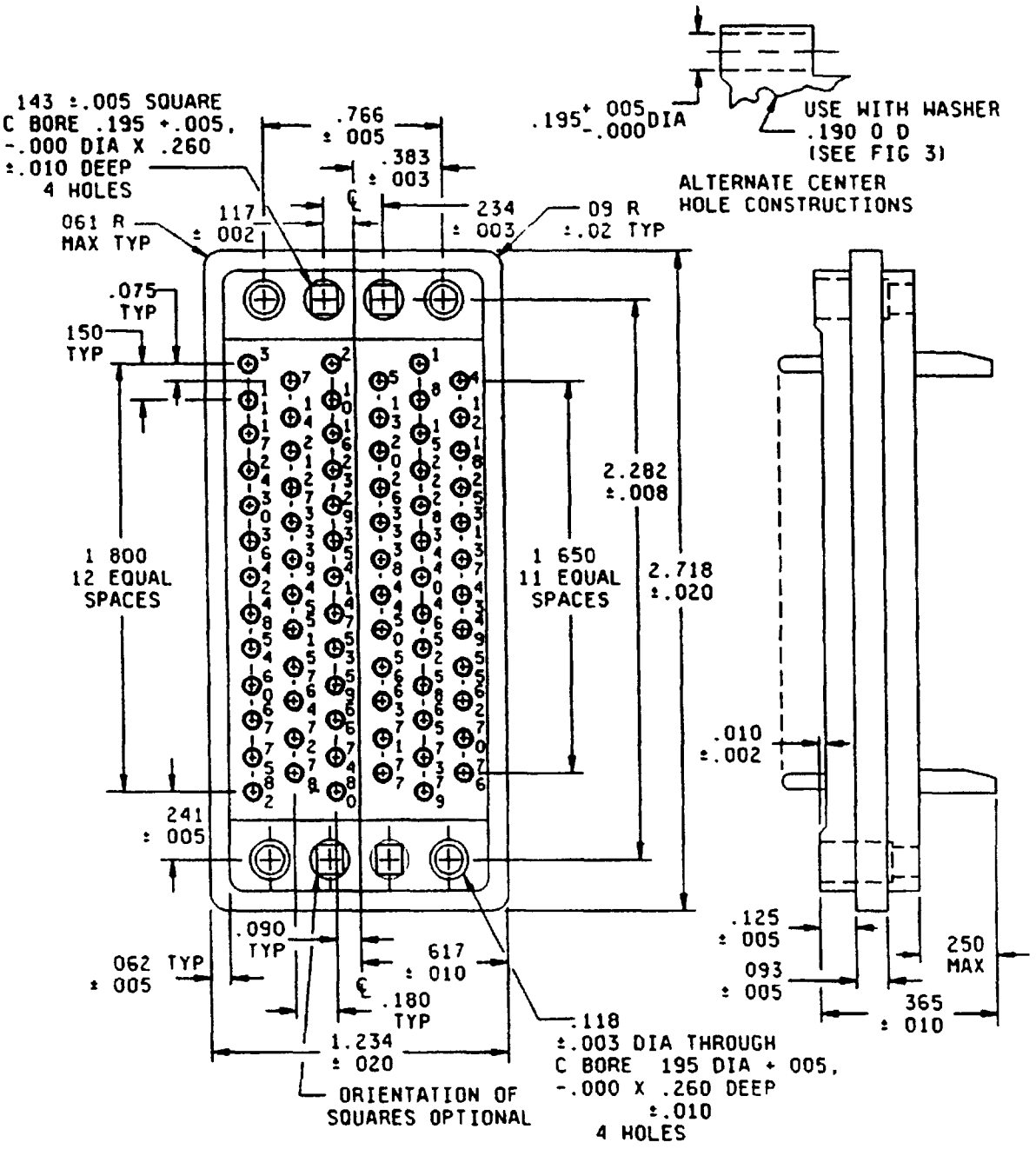

Configuration M (4) for long jackscrews and hood only (thru hole alternate construction)

Insert with 75 contacts

Configurations J (3) and M (4)

FIGURE 2 Insert arrangements - Continued

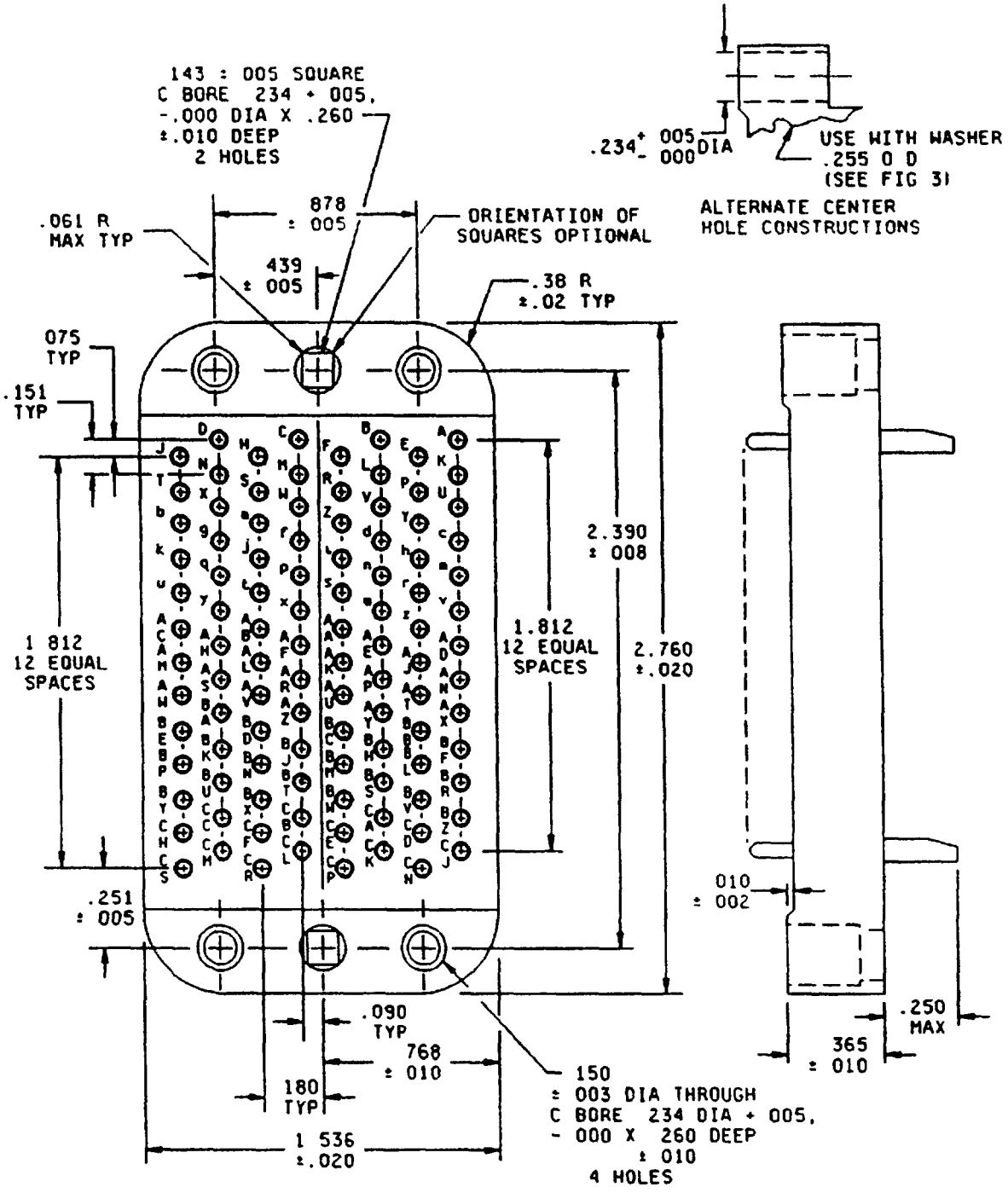

Configuration L (6) for long jackscrews and hood only (thru hole alternate construction)

Insert with 104 contacts

Configurations K (5) and L (6)

FIGURE 2 Insert arrangements - continued

Inches	mm	Inches	mm	Inches	mm	Inches	mm
002	0 05	153	3 89	302	7 67	909	23 09
003	0 08	160	4 06	350	8 89	1 002	25 45
005	0 13	172	4 37	365	9 27	1 050	26 67
008	0 20	175	4 45	.375	9 53	1 200	30 48
010	0 25	180	4 57	380	9 65	1 223	31 06
016	0 41	181	4 60	406	10 31	1 234	31 34
020	0 51	187	4 75	.4375	11 113	1 250	31 75
062	1 57	190	4 83	438	11.13	1 317	33 45
065	1 65	195	4 95	439	11 15	1 350	34 29
070	1 78	200	5 08	452	11 48	1 500	38 10
075	1 91	205	5.21	453	11 51	1 536	39 01
081	2 06	206	5.23	465	11 81	1 562	39 67
086	2 18	219	5 56	468	11 89	1 625	41 28
090	2 29	228	5 79	562	14 27	1 650	41 91
093	2 36	234	5 94	603	15 32	1 688	42 67
095	2 41	240	6 10	617	15 63	1 800	45 72
110	2 79	241	6 12	750	19 05	2 000	50.80
118	3 00	244	6 20	766	19 46	2 282	57 96
125	3 18	250	6 35	.768	19 51	2 312	57 72
130	3 30	251	6 38	781	19 84	2 390	60 71
133	3 38	252	6 40	850	21 59	2 718	69 04
143	3 63	260	6 60	875	22 23	2 760	70 10
150	3 81	272	6 91	878	22 30		
151	3 84	281	7 14	900	22 86		

NOTES

1 Dimensions are in inches
2 Metric equivalents are given for general information only
3 Unless otherwise specified, tolerance is ± 015 (0 38 mm)
4 Tolerance between any two adjacent contact centers shall be ± 004 (0 10 mm) Tolerance between any two contact centers, other than adjacent centers, shall be ±.006 (0 15 mm)
5 Dimensions and configuration shall be in accordance with above figure
6 Contact identification may be located on either side of the contact hole but shall appear on the front and rear of each insert

FIGURE 2 Insert arrangements Continued

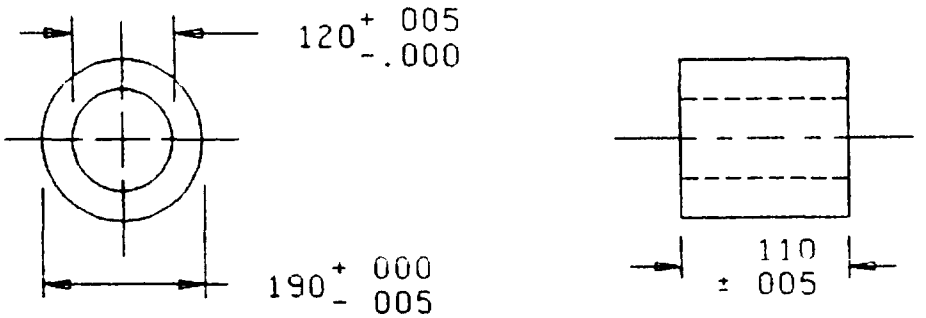

For use with inserts with 34, 42, 50, and 75 contacts

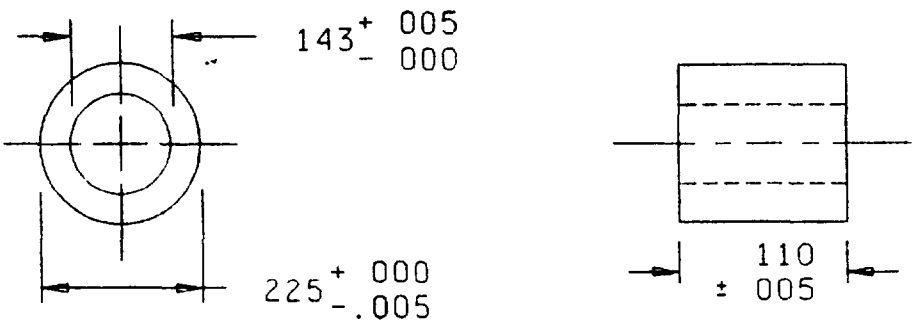

For use with inserts with 104 contacts

Inches	mm
005	0 13
110	2 79
120	3.05
143	3 63
190	4 83
225	5 72

NOTES

1. Dimensions are in inches
2. Unless otherwise specified, tolerance is ± 015 (0 38 mm)
3. Material. Corrosion resistant steel, in accordance with QQ-S-763 or QQ-S-764, class 32, 303, 303Se, 304 or 316
4. Finish Passivated in accordance with QQ-P-35

FIGURE 3 Washer

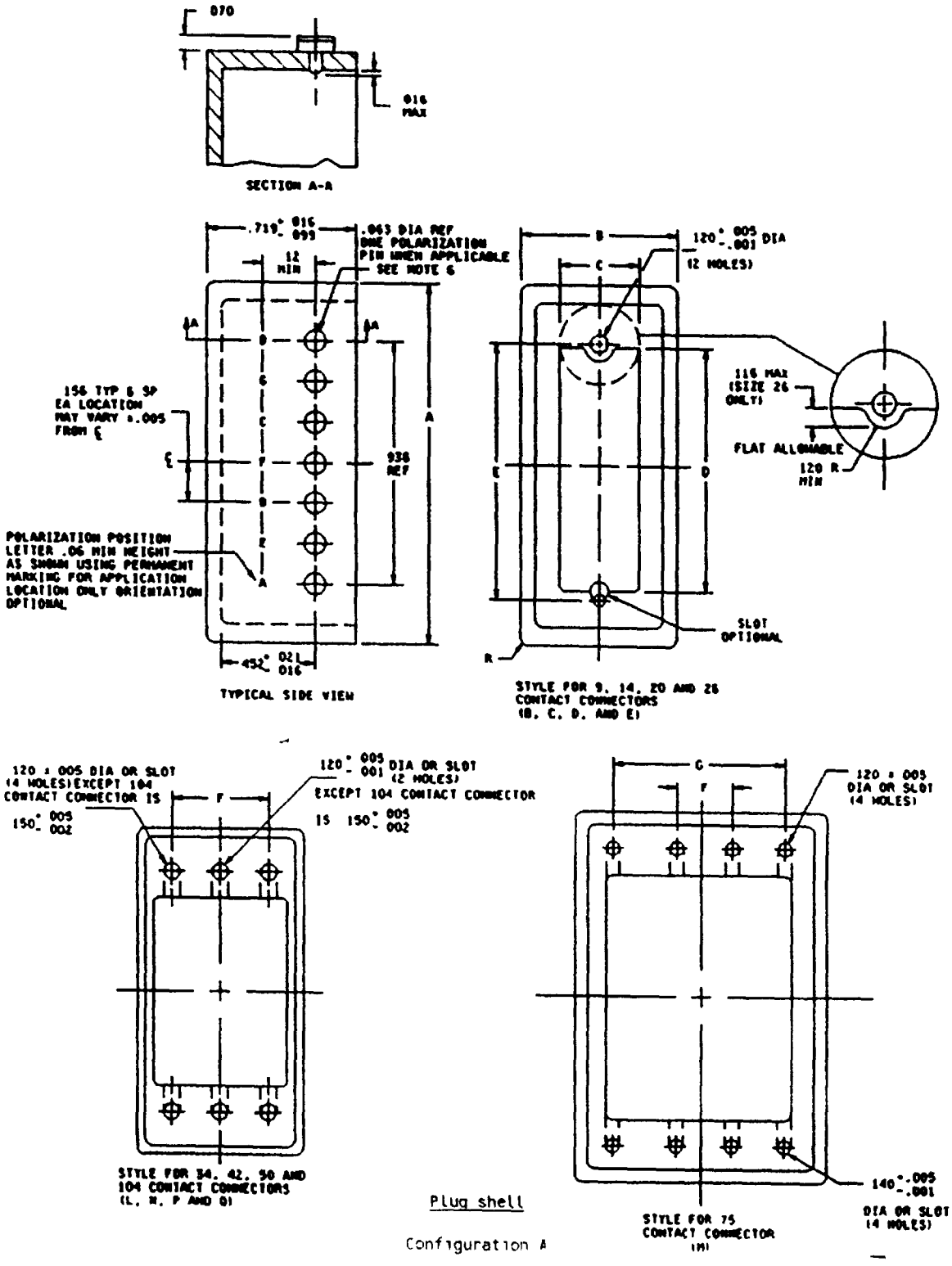

Plug shell

Configuration A

FIGURE 4 Shell configurations

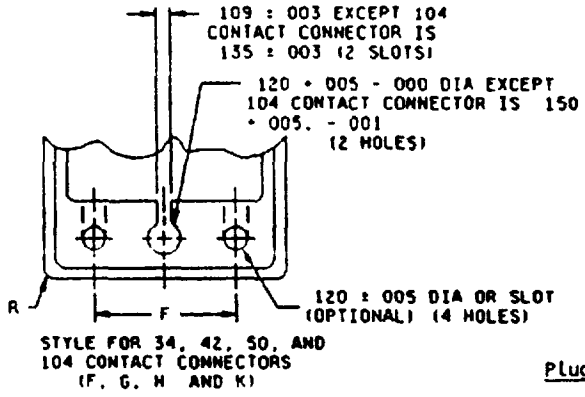

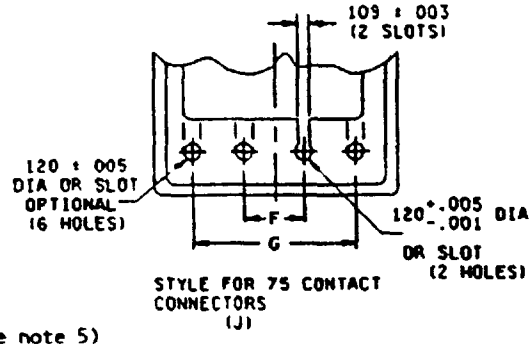

Plug shell

Configuration B (see note 5)

Insert designator (see note 7)	Connector size (number of contacts)	A max	B max	C min	D min	E ±.005 (0 13)	F ±.005 (0 13)	G ±.005 (0.13)	R
B (S)	9	1 440 (36 57)	500 (12 70)	375 (9 52)	864 (21 94)	1 000 (25 40)	-----	-----	141 (3 58)
C (T)	14	1 380 (35 05)	567 (14 40)	440 (11 17)	.800 (20 32)	938 (23 82)	-----	-----	141 (3 58)
D (U)	20	1 700 (43 18)	567 (14 40)	440 (11.17)	1 097 (27.86)	1.250 (31 75)	-----	-----	.141 (3 58)
E (V)	26	1 755 (44 57)	688 (17 47)	565 (14 35)	1 182 (30 02)	1 312 (33 32)	-----	-----	141 (3 58)
F (W) or Q (X)	34	2 130 (54 10)	880 (22 35)	745 (18 92)	1 400 (35 56)	1 688 (42 87)	468 (11 88)	-----	141 (3 58)
G (Y) or P (Z)	42	2 442 (62 02)	880 (22 35)	745 (18 92)	1 700 (43 18)	2 000 (50 80)	468 (11 88)	-----	141 (3 58)
H (1) or N (2)	50	2 846 (72 28)	1 005 (25 52)	.745 (18 92)	2 026 (51 46)	2.281 (57.93)	468 (11 88)	-----	141 (3 58)
J (3) or M (4)	75	2 850 (72 39)	1 365 (34 67)	1 104 (28 04)	2 026 (51 46)	2 281 (57 93)	234 (5 94)		187 (4 74)
K (5) or L (6)	104	2 890 (73 40)	1 670 (42 18)	1 476 (37 49)	2 073 (52 50)	2 375 (60 32)	875 (22 22)	-----	422 (10 71)

Plug shell

Configurations A and B

FIGURE 4 Shell configurations - Continued

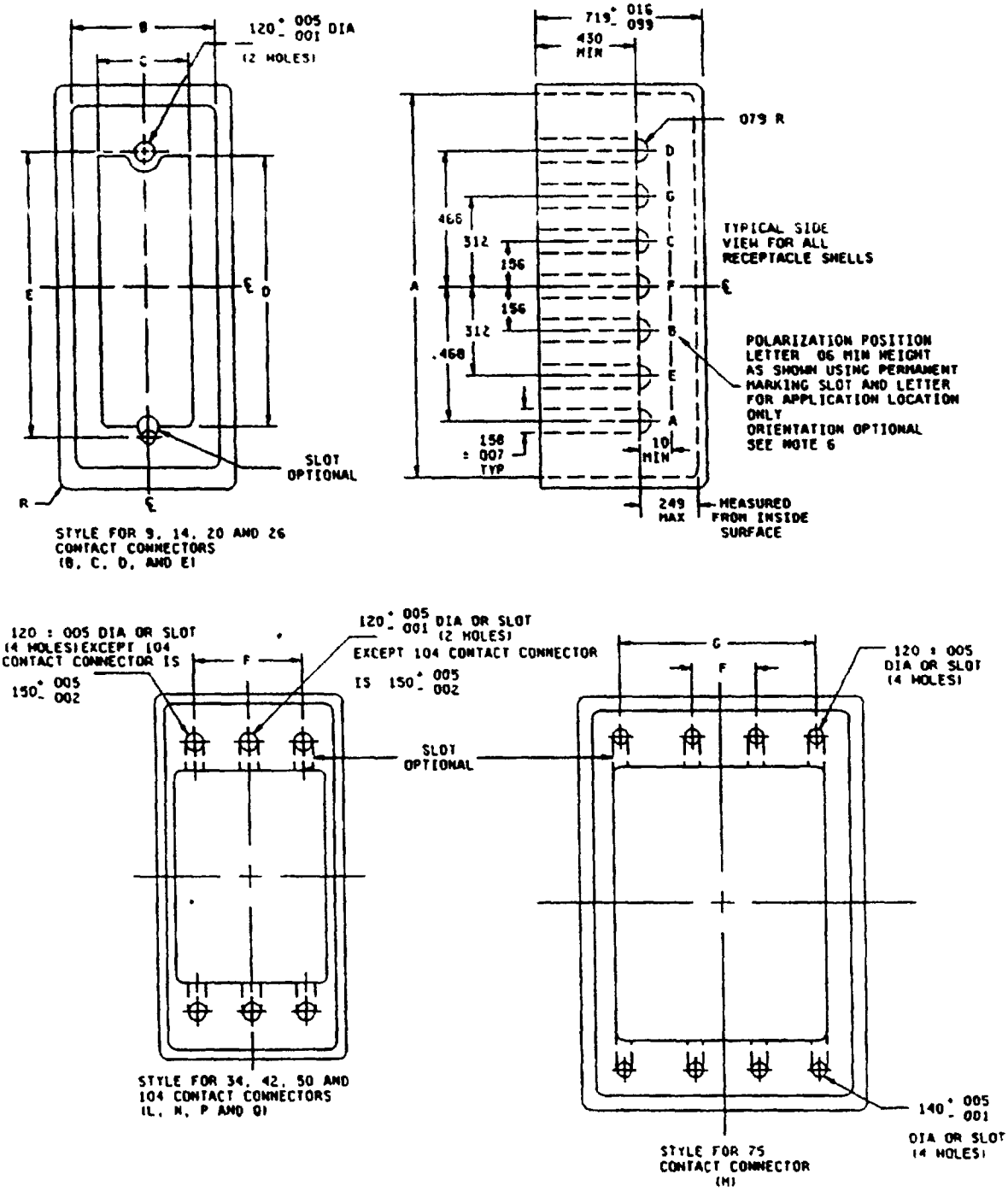

Receptacle shell

Configuration A

FIGURE 4 Shell configurations - Continued

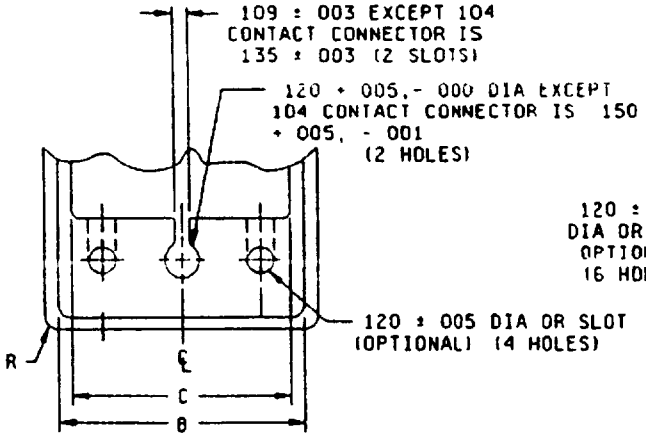

STYLE FOR 34, 42, 50, AND
104 CONTACT CONNECTORS
(F, G, H, AND K)

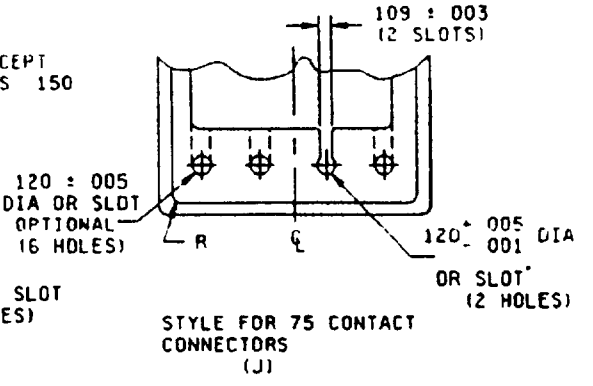

STYLE FOR 75 CONTACT
CONNECTORS
(J)

Receptacle shell

Configuration B (see note 5)

Insert designator (see note 7)	Connector size (number of Contacts)	A min	B min	C min	D min	E ±.005 (0 13)	F ± 005 (0 13)	G ± 005 (0 13)	R
B	9	1 448 (36 77)	512 (13 00)	375 (9 52)	864 (21 94)	1 000 (25 40)	-----	-----	141 (3 58)
C	14	1 388 (35 25)	575 (14 60)	440 (11 17)	800 (20 32)	938 (23 82)	-----	-----	141 (3 58)
D	20	1 702 (43 23)	575 (14 60)	440 (11 17)	1 097 (27.86)	1 250 (31 75)	-----	-----	141 (3 58)
E	26	1 763 (44 78)	696 (17 67)	565 (14 35)	1 182 (30 02)	1 312 (33 32)	-----	-----	141 (3 58)
F (W) or Q (X)	34	2 138 (54 30)	888 (22 55)	745 (18 92)	1 400 (35 56)	1 688 (42 87)	468 (11 88)	-----	141 (3 58)
G (Y) or P (Z)	42	2 450 (62 23)	888 (22 55)	745 (18 92)	1 700 (43 18)	2 000 (50 80)	468 (11 88)	-----	141 (3 58)
H (1) or N (2)	50	2 856 (72 54)	1 015 (25 78)	745 (18 92)	2 026 (51 46)	2 281 (57 93)	468 (11 88)	-----	188 1/ (4 77)
J (3) or M (4)	75	2 855 (72 51)	1 370 (34 79)	1 104 (28 04)	2 026 (51 46)	2 281 (57 93	234 (5 94)	766 (19 45)	203 (5 15)
K (5) or L (6)	104	2 900 (73 66)	1 680 (42 67)	1 476 (37 49)	2 073 (52 65)	2 375 (60 32)	875 (22 22)	-----	422 (10 71)

1/ Tolerance + 020 inch (0 50 mm), - 016 inch (0 40 mm)

Receptacle shell

Configurations A and B

FIGURE 4 Shell configurations - Continued

Inches	mm	Inches	mm	Inches	mm	Inches	mm	Inches	mm
001	0 03	187	4 75	766	19 46	1 380	35 05	2 420	61 47
.002	0.05	188	4 78	.800	20 32	1.400	35.56	2 442	62 03
003	0 08	203	5 16	864	21 94	1 440	36.58	2 450	62 23
005	0 13	234	5 94	875	22 22	1 448	3 78	2 846	72 29
007	0 18	249	6 32	.880	22 35	1 476	37 49	2 850	72 39
016	0 41	312	7 92	888	22 56	1 670	42 42	2 855	72 52
020	0 51	375	9 52	.936	23 77	1 680	42 67	2 856	72 54
.021	0 53	422	10 72	.938	23.82	1 688	42 88	2 890	73 41
.060	1 52	430	10 92	1.000	25.40	1.696	43 08	2 900	73 66
.099	2.51	440	11 18	1.005	25 53	1.700	43.18		
100	2 54	452	11 48	1 015	25 78	1 702	43.23		
104	2 64	468	11 89	1 097	27.86	1 755	44 58		
109	2 77	500	12 70	1.104	28.04	1.969	50 01		
116	2 95	512	13 00	1 115	28.32	2 000	50.80		
120	3 05	565	14 35	1 182	30.02	2 026	51 46		
135	3.43	567	14 40	1 250	31.75	2 073	52 65		
140	3 56	575	14 60	1.254	31 85	2 130	54 10		
141	3.58	688	17.48	1.264	32 10	2.138	54.30		
150	3.81	696	17.68	1.312	33 32	2 281	57.94		
156	3 96	719	18.26	1.365	34.67	2 375	60 32		
158	4 01	745	18 92	1 370	34 80	2 410	61 21		

NOTES

1. Dimensions are in inches
2. Unless otherwise specified, tolerance is ± 016 (0 41 mm)
3. Material Aluminum alloy in accordance with QQ-A-250/8, temper 0, or QQ-A-250/1, temper H12, 040 inch (1 02 mm)
4. Finish Anodize in accordance with MIL-A-8625, type I or type II
5. Not used with one piece jackscrews shields of figure 2, configuration B
6. The part number includes the polarization letter from figure Use the letter "R" if polarization is not required
7. Insert designators in parentheses are for piece part ordering data

FIGURE 4 Shell configurations - Continued

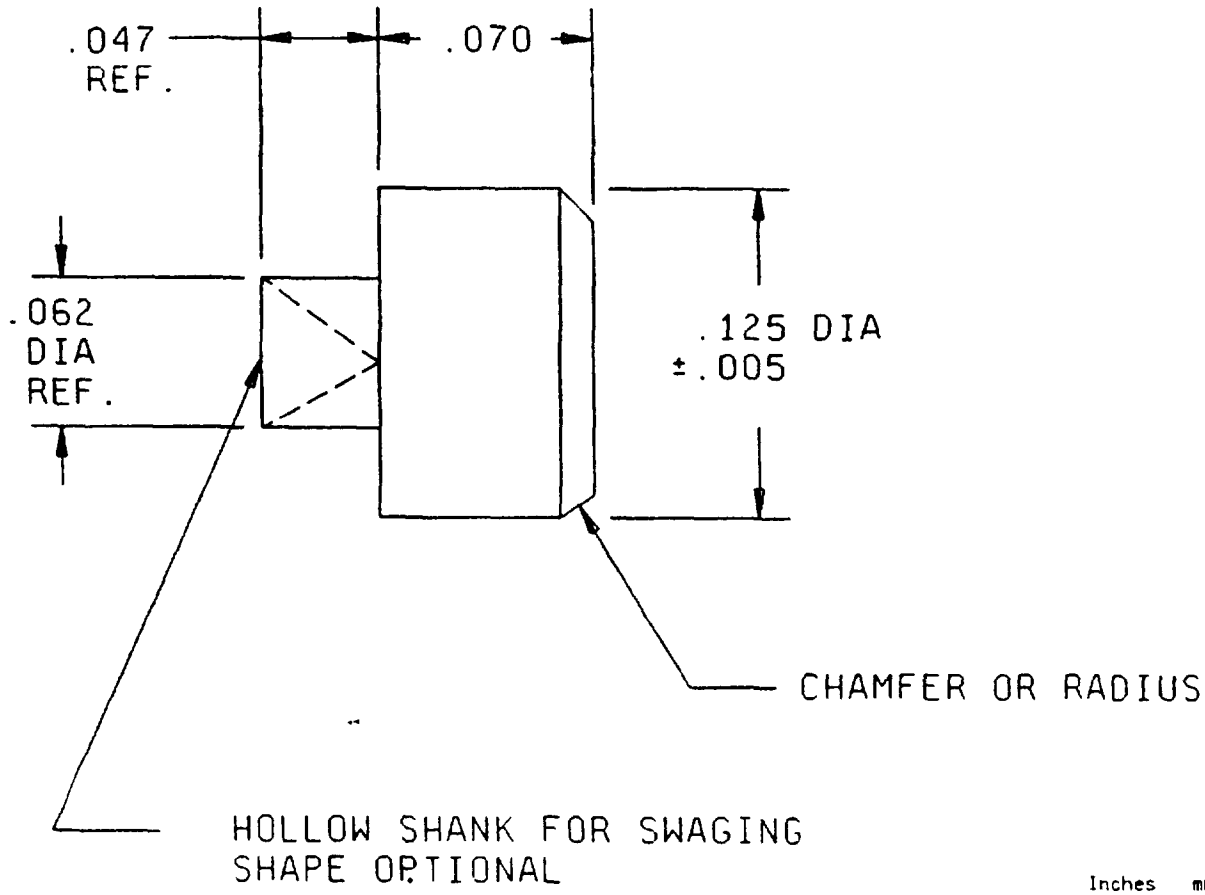

Inches	mm
005	0 13
047	1 19
062	1 57
070	1 78
125	3 18

NOTES

1. Dimensions are in inches
2. Unless otherwise specified, tolerance is ± 016 (0 41 mm)
3. Metric equivalents are given for general information only
4. Material Corrosion resistant steel in accordance with QQ-S-763, class 302 303, 303Se, 304 or 316, or ASTM A484, or ASTM A532

Pin , straight headed

Configuration

FIGURE 5 Pin configuration

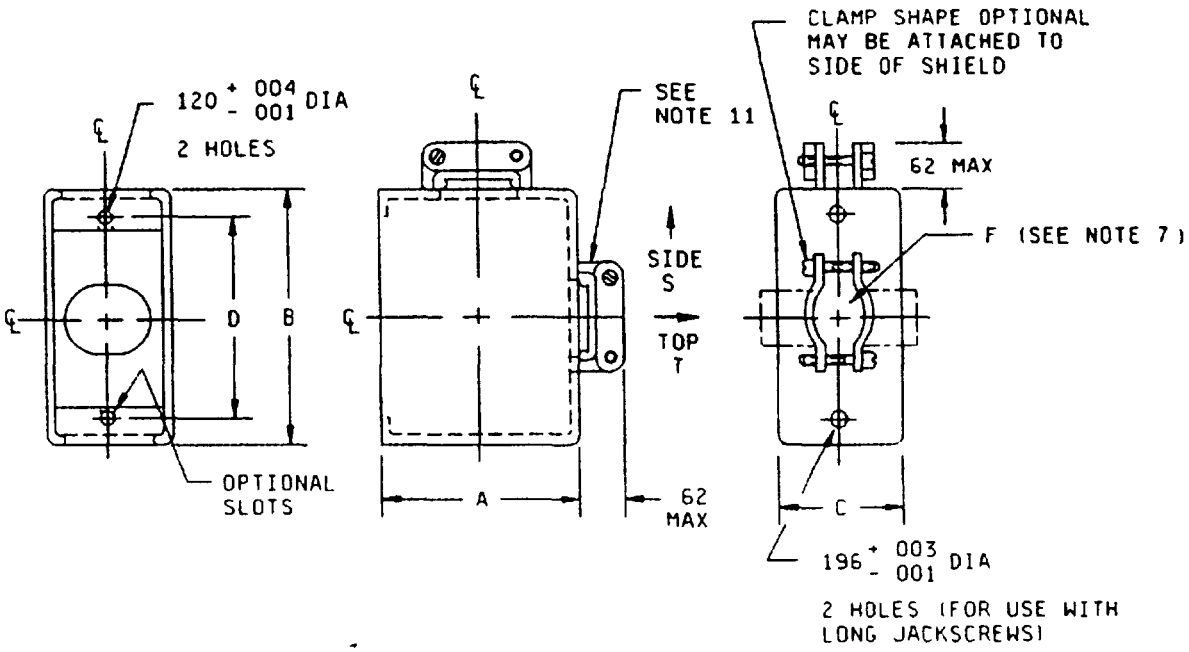

For use with insert configurations A (R), B (S), C (T), D (U), and E (V)

Shield

Configuration A

FIGURE 6 Shield configurations

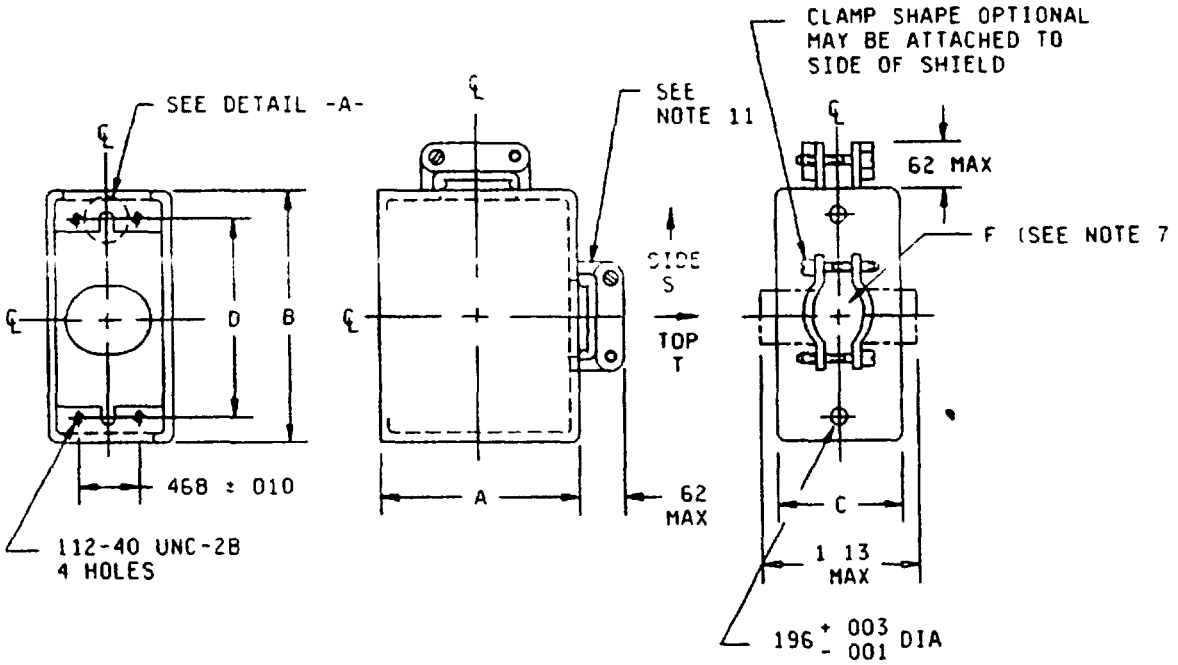

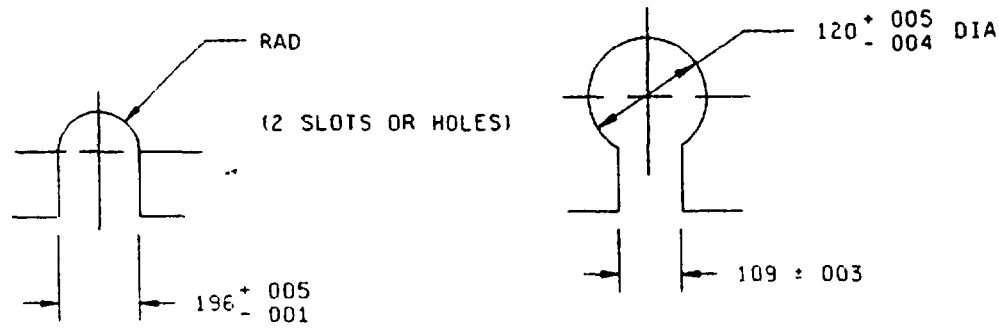

STYLE FOR 34,42,AND 50 CONTACT CONNECTOR (F,G,AND H)

ALTERNATE CONFIGURATIONS (N,P, AND Q) SEE NOTE 10

DETAIL -A-

For use with insert configurations F (W), G (Y), H (1), N (2), P (Z), and Q (X)

Shield

Configuration A

FIGURE 6 Shield configurations - Continued

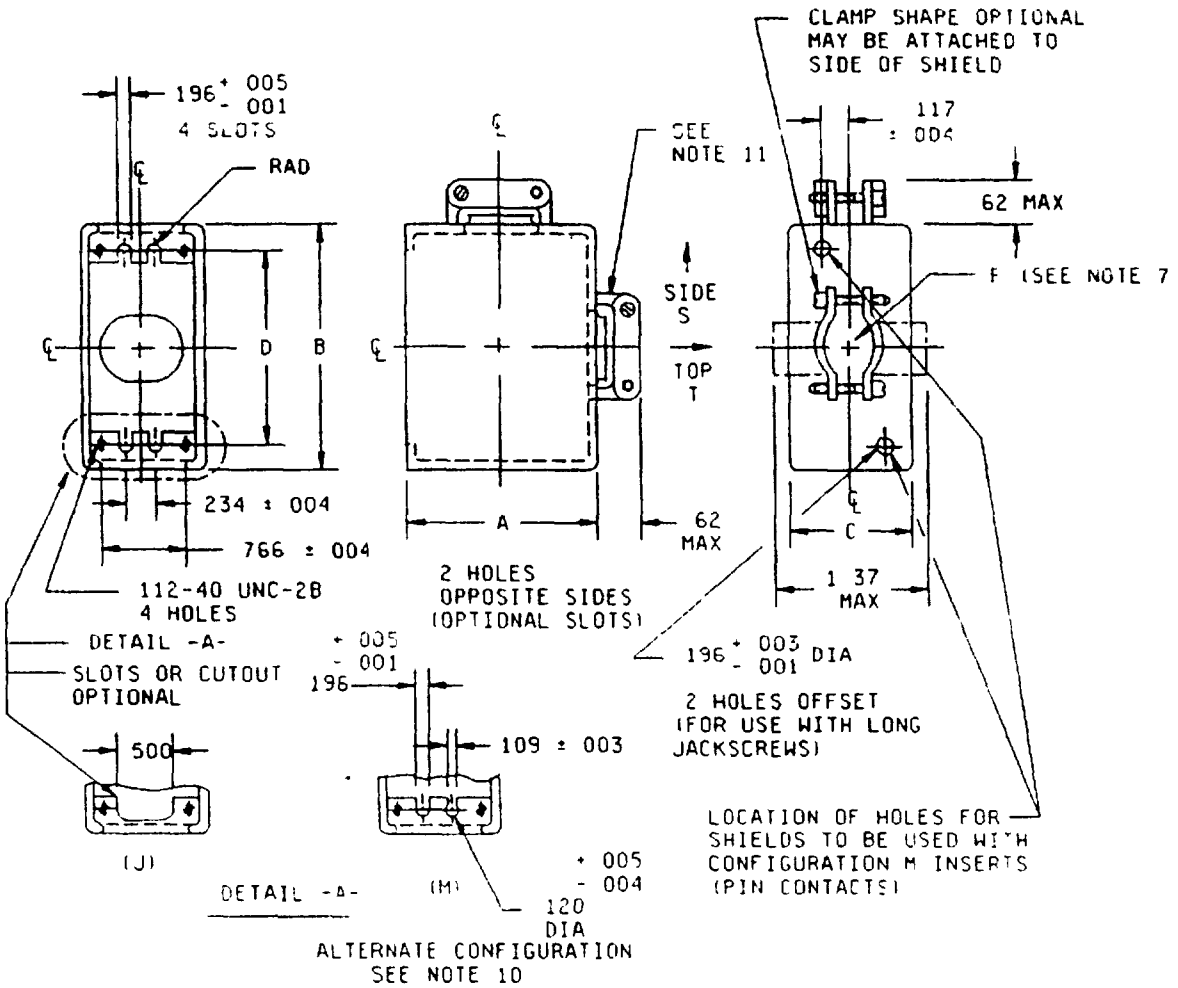

for use with insert configurations J (3) and M (4)

Shield

Configuration A

FIGURE 6 Shield configurations - Continued

Insert designator 1/ 2/ 3/	Configuration and cable opening	Connector size	A max min	B ± 016 (41)	C ± 016 (41)	D ± 010 (25)	F min cable opening
A (R)	1 or 2	7	1 35 (34 3) 1 18 (30 0)	1.220 (30 99)	437 (11 09)	906 (23 01)	18 (4 6)
B (S)	1 or 2	9	1 35 (34 3) 1 18 (30 0)	1 312 (12.70)	437 (11 09)	1 000 (25 40)	10 (2 5)
C (T)	1 or 2	14	1 35 (34.3) 1 18 (30.0)	1 250 (31 75)	500 (12 70)	.938 (23 82)	19 (4 8)
D (U)	1 or 2	20	1 35 (34.3) 1.18 (30.0)	1 562 (39 67)	500 (12 70)	1 250 (31 75)	22 (55.9)
E (V)	1 or 2	26	1 35 (34.3) 1.18 (30 0)	1 625 (41.27)	640 (16 25)	1 312 (33.32)	22 (55 9)
F (W) or Q (X)	1 or 2	34	1 35 (34 3) 1 22 (31 0)	2 000 (50 80)	828 (21 03)	1 688 (42 87)	34 (8 6)
G (Y) or P (Z)	1 or 2	42	1 35 (34 3) 1 22 (31 0)	2 312 (58 72)	828 (21 03)	2 000 (50 80)	34 (8 6)
H (1) or N (2)	1 or 2	50	1 35 (34 3) 1.22 (31 0)	2 312 (58 72)	828 (21 03)	2 282 (57 96)	34 (8 6
J (3)	1 or 2	75	1 35 (34 3) 1 22 (31 0)	2 594 (65 88)	1 188 (30 17)	2 282 (57 96)	.55 (14 0)
M (4)	1 or 2	75	1 35 (34 3) 1 22 (31 0)	2 594 (65 88)	1 188 (30 17)	2 282 (57 96)	55 (14 0)

1/ Used when shell is specified

2/ Insert designators L (6), M (4), N (2), P (Z), and Q (X) use with one piece jackscrews

3/ Insert designators for piece part orders are in parentheses

FIGURE 6 Shield configurations - Continued

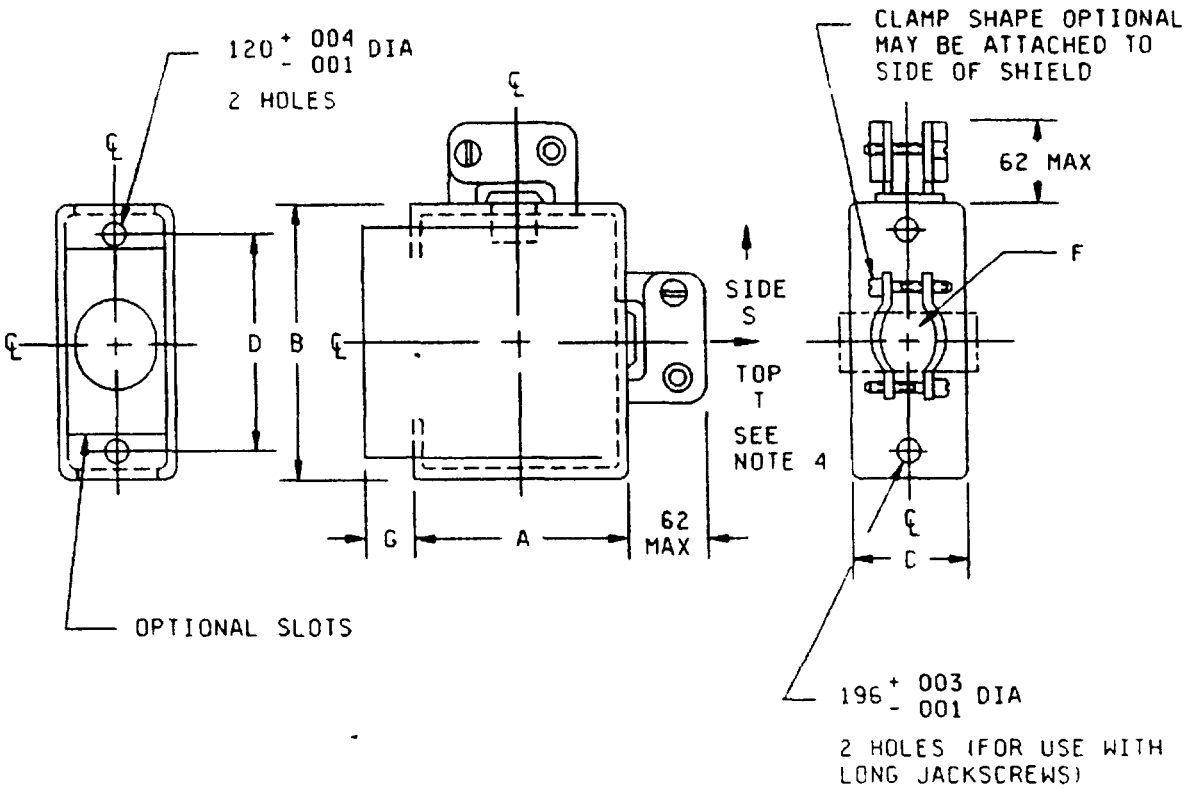

For use with insert configurations A (R), B (S), C (T), D (U), and E (V)

Shield

Configuration B

FIGURE 6 Shield configurations - Continued

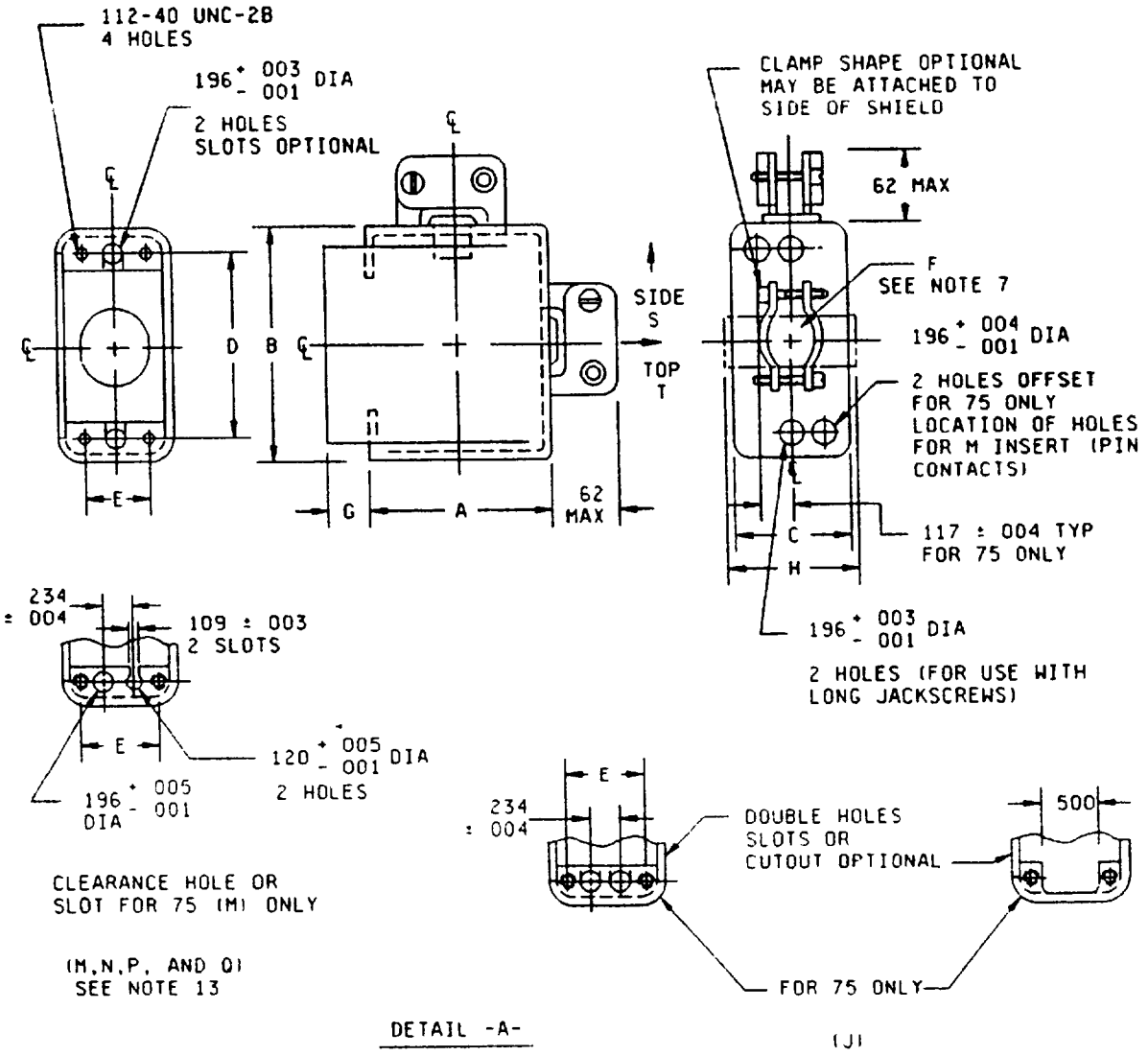

For use with insert configurations F (W), G (Y), H (1), J (3), M (4), N (2), P (Z), and Q (X)

Shield

configuration B

FIGURE 6 Shield configurations - Continued

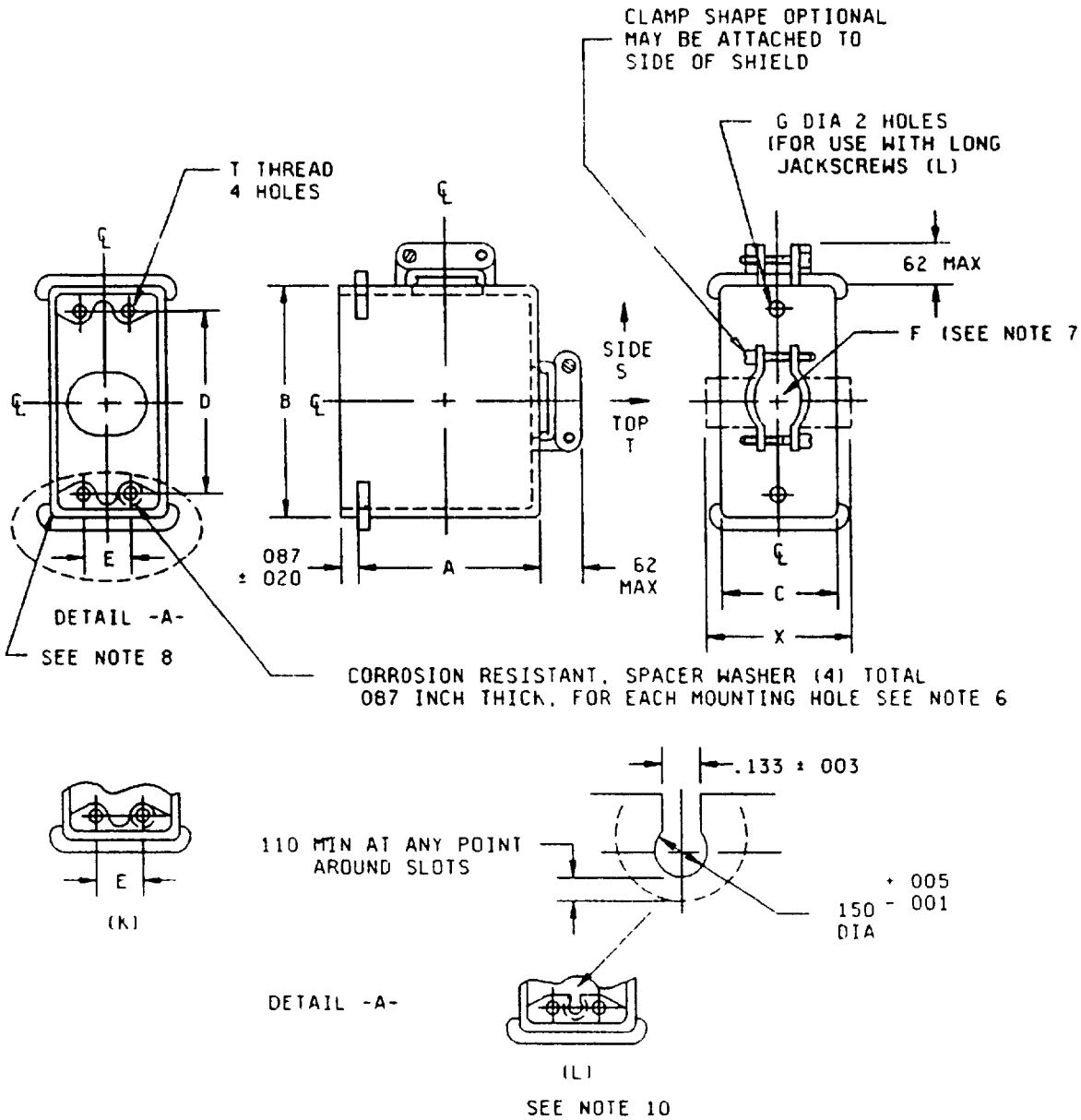

For use with insert configurations K (5) and L (6)

Shield

Configuration B

FIGURE 6 Shield configurations - Continued

DETAIL A

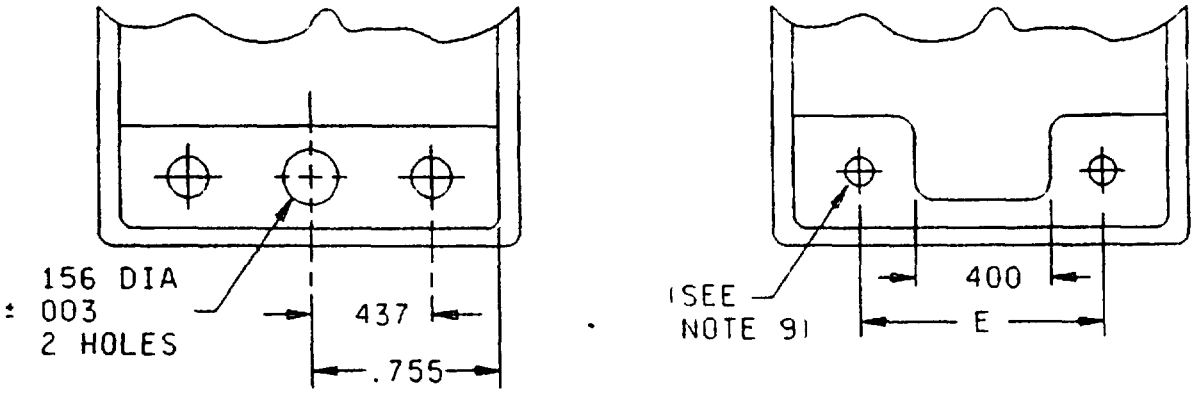

Alternate configurations K (5) and L (G)

For use with insert configurations K (5) and L (G)

Shield

Configuration B

FIGURE 6. Shield configurations - Continued

Insert designator 1/ 2	Configuration and cable opening	Connector size	A max min	B ± 016 (0 41)	C ± 016 (0 41)	D ± 005 (0 13)	F min cable opening	G ± 047 (1 19)
A (R) 3/	3 or 4	7	1 35 (34 3) 1 18 (30 0)	1 218 (32 51)	437 (11 10)	906 (23 01)	0 07 (1 8)	0 265 (6 73)
B (S) 3/	3 or 4	9	1 35 (34 3) 1 18 (30 0)	1 312 (33 32)	437 (11 10)	1 000 (25 40)	0 16 (4 1)	0 265 (6 73)
C (T) 3/	3 or 4	14	1 35 (34 3) 1 18 (30 0)	1 250 (31 75)	.500 (12 70)	937 (23 80)	019 (4 82)	0 265 (6 73)
D (U) 3/	3 or 4	20	1 35 (34 3) 1 18 (30 0)	1 562 (39 67)	500 (12 70)	1 250 (31 75)	22 (5 6)	0 265 (6 73)
E (V) 3/	3 or 4	26	1 35 (34 3) 1 18 (30 0)	1 625 (41 28)	634 (16 10)	1 312 (33 32)	0 26 (6 6)	0 265 (6 73)
F (W) 3/	3 or 4	34	1 35 (34 3) 1 22 (31 0)	2 000 (50 80)	828 (21 03)	1 688 (42 88)	0 34 (8 6)	0 265 (6 73)
G (Y) 3/	3 or 4	42	1 35 (34 3) 1 22 (31 0)	2 312 (58 92)	828 (21 03)	2 000 (50 80)	0 34 (8 6)	0 093 (2 362)
H (1) 3/	3 or 4	50	1 35 (34 3) 1.22 (31 0)	2 594 (65.89)	828 (21 03)	2 282 (57 96)	0 34 (8 6)	093 (2 36)
J (3) 3/	3 or 4	75	1 35 (34.3) 1 22 (31.0)	2 594 (65 89)	1 188 (30 18)	2 282 (57 96)	0 55 (14 0)	0 93 (2 4)
K (5) 3/ 4/ 5/	3 or 4	104	2 26 (57 4) 2 20 (55 9)	2 835 (72 01)	1 625 (41 28)	2 375 (60 33) 6/	1 10 (2 8)	0 229 (5 81)
L (G) 3/ 4/ 6/	3 or 4	104	2 26 (57 4) 2 20 (55 9)	2 835 (72 01)	1 625 (41 28)	2 375 (60 33) 6/	1 10 (2 8)	0 229 (5 81)

Shield

Configuration B

FIGURE 6 Shield configurations - Continued

Insert designator 1/ 2/	Configuration and cable opening	Connector size	A max min	B ± 016 (0 41)	C ± 016 (0 41)	D ± 005 (0 13)	E ± 005 (0 13)	F min cable opening	G ± 047 (1 19)	H max
Q (X) 7/	3 or 4	34	1 35 (34 3) 1 22 (31 0)	2 000 (50 80)	828 (21 03)	1 688 (42 87)	468 (11 88)	34 (8 6)	265 (6 73)	1 13 (28 7)
P (Z) 7/	3 or 4	42	1 35 (34 3) 1 22 (31 0)	2 312 (58 72)	828 (21 03)	2 000 (50 80)	468 (11 88)	34 (8 6)	093 (2 36)	1 13 (28 7)
N (2) 7/	3 or 4	50	1 35 (34 3) 1 22 (31 0)	2 594 (65 88)	828 (21 03)	2 282 (57 96)	468 (11 88)	34 (8 6)	093 (2 36)	1 13 (28 7)
M (4) 7/	3 or 4	75	1 35 (34 3) 1 22 (31 0)	2 594 (65 88)	1 188 (30 17)	2 282 (57 96)	766 (19 45)	766 (19 45)	093 (2 36)	1 37 (34 8)

1/ Insert designators for piece parts are in parentheses

2/ Tolerance is ± 010 inch (0 25 mm), unless otherwise specified

3/ For use when no shell is specified

4/ For use with or without shells

5/ T thread 138-32 UNC-2B X max 1 88

6/ T thread 138-40 UNC-2B X max 1 88

7/ Use with one-piece jackscrews and are not used with shells

Shield

Configuration E

FIGURE 6 Shield configurations Continued

Inches	mm	Inches	mm	Inches	mm	Inches	mm
001	0 03	133	3 38	550	13 97	1 250	31 75
003	0 08	138	3 51	620	15 75	1 312	32 42
004	0 10	150	3 81	755	19 17	1 350	34 29
005	0 13	160	4 06	766	19 45	1 370	34 79
010	0 25	190	4 83	828	21 03	1 562	39 67
016	0 41	196	4 98	875	22 23	1 625	41 28
020	0 51	220	5 59	890	22 61	1 660	42 16
030	0 76	226	6 60	906	23 01	1 688	42 88
047	1 19	229	5 81	937	23 80	1 969	50 01
062	1 57	234	5 94	1 000	25 40	2 000	50 80
070	1 78	260	6 60	1 100	27 94	2 230	56 66
087	2 21	265	6 73	1 110	28 19	2 282	57 97
093	2 36	340	8 63	1 130	28 70	2 312	58 72
109	2 77	400	10 16	1 170	29 72	2 366	60 10
110	2 79	437	11 09	1 180	29 97	2 375	60 33
112	2 84	460	11 70	1 211	30 76	2 594	65 89
117	2 97	468	11 89	1 218	30 94	2 835	72 01
120	3 05	500	12 70	1 220	30 98		

NOTES

1 Dimensions are in inches
2 Unless otherwise specified, tolerance is ± 016 (0 41 mm)
3 Metric equivalents are in parentheses and are given for general information only
4 Material Aluminum alloy in accordance with QQ-A-250/8, temper H32, 040 inch (0 41 mm)
5 Finish Anodized in accordance with MIL-A-8625, type I or type II
6 Spacer washers (4), are used only with shell, discard in other uses Aluminum shall be in accordance with QQ-A-250/11, T6, anodized in accordance with MIL-A-8625, type I or type II
7 Edges of cable entry hole to be rounded to prevent insulation chafing
8 No cracks, chips, or sharp edges on all 4 edges of flange
9 Number 6-32 UNC-2B swedge and thread 4 holes
10 For use with one-piece jackscrews
11 Clamp hinge may attach to side of shield
12 Contact type and jack screw orientation must be separated to guarantee intermateability
13 Shield configuration B, insert designators M, N, P, and Q are for use with one-piece jackscrews and are not used with shell

FIGURE 6 Shield configurations - Continued

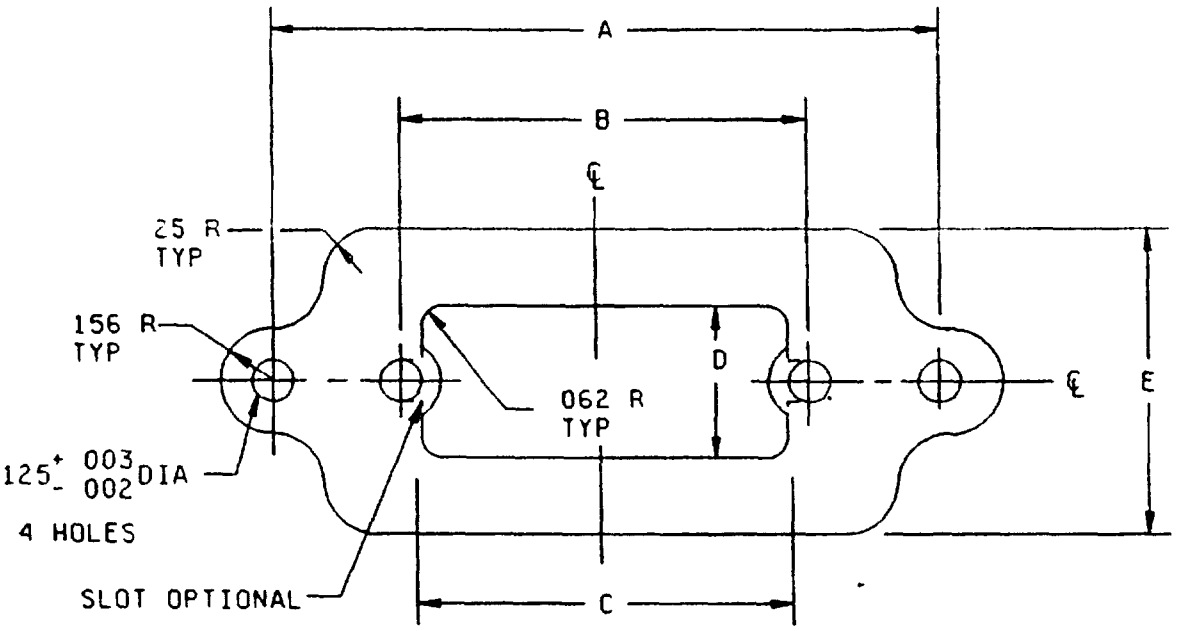

Retaining plate designator	Connector size (number of contacts)	A ± 005 (0 13)	B ± 005 (0 13)	C	D	E
A	9	2.016 (51 20)	1.000 (25.40)	.875 (22 22)	406 (10.31)	953 (24 20)
B	14	1 953 (49.60)	.937 (23 79)	.812 (20.62)	469 (11.91)	1 016 (25.80)
C	20	2 266 (57.55)	1.250 (31 75)	1 125 (28 57)	469 (11 91)	1 016 (25 80)
D	26	2 328 (59 13)	1 312 (33 32)	1 187 (30.14)	593 (15 06)	1 141 (28 98)

Retaining plate

Configuration A

FIGURE 7 Shield retaining plate configurations

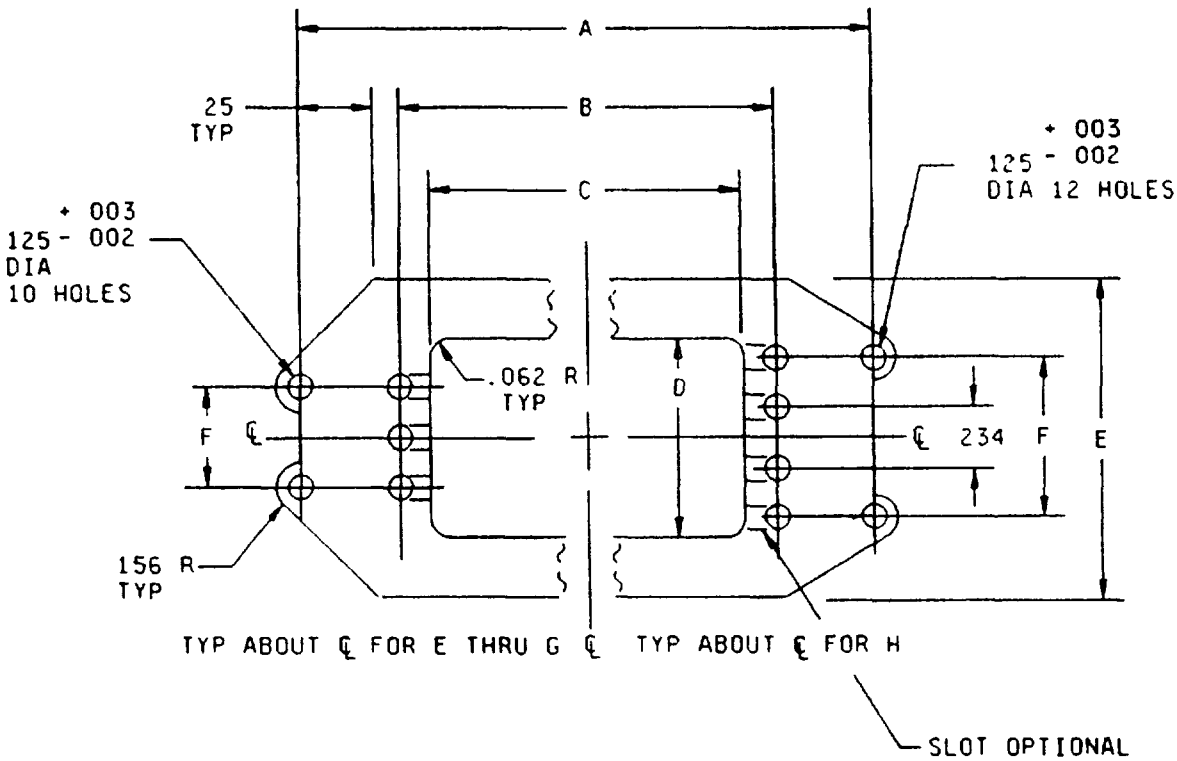

Retainer plate designator	Connector size (number of contacts)	A ± 005 (0 13)	B ± 005 (0 13)	C	D	E	F ± 005 (0 13)
F	34	2 703 (68 65)	1 687 (42 84)	1 438 (36 52)	750 (19 05)	1 328 (33 73)	468 (11 88)
G	42	3 016 (76 60)	2.000 (50 80)	1 750 (44 45)	750 (19.05)	1 328 (33 73)	468 (11 88)
H	50	3 422 (86.91)	2 281 (57 93)	2 031 (51 58)	750 (19 05)	1 453 (36 90)	468 (11 88)
J	75	3 422 (86 91)	2 281 (57 93)	2 031 (51 58)	1 109 (28 16)	1 797 (45 64)	766 (19 45)

Retaining plate

Configuration B

FIGURE 7 Shield retaining plate configurations - Continued

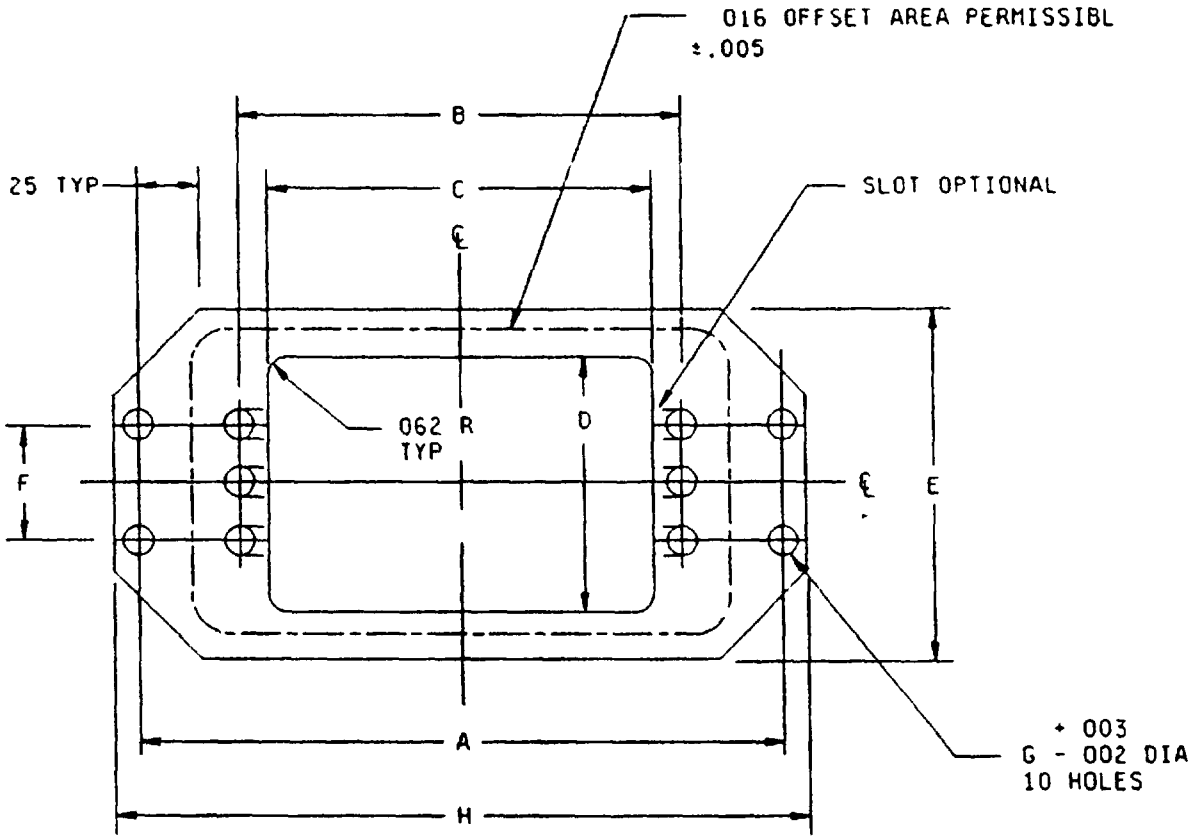

Retainer plate designator	Connector size (number of contacts)	A ± 005 (0 13	B ± 005 (0 13)	C	D	E	F ± 005 (0 13)	G	H
K	104	3 500 (88 90)	2 375 (60 32)	2 125 (53 97)	1 486 (37 74)	2 000 (50 80)	875 (22 25)	10 150 (3 81)	3 8 (98

Retaining plate

Configuration C

FIGURE 7 Shield retaining plate configurations - Continued

Inches	mm	Inches	mm	Inches	mm	Inches	mm
002	0 05	750	19 05	1 328	33 73	2 281	57 94
003	0 08	766	19 46	1 438	36 53	2 328	59 13
005	0 13	812	20 62	1 453	36 91	2 375	60 33
016	0 41	875	22 23	1 486	37 74	2 703	68 66
062	1 57	937	23 80	1 687	42 85	2 984	75 79
125	1 57	953	24 21	1 688	42 88	3 106	78 89
150	3 81	1 000	25 40	1 718	43 64	3 296	83 72
156	3 96	1 016	25 81	1 750	44 45	3 422	86 92
234	5 94	1 109	28 17	1 953	49 61	3 500	83 90
250	6 35	1 125	28 58	2 000	50 80	3 875	98 43
406	10 31	1 141	28 98	2 016	51 21		
468	11 89	1 187	30 15	2 031	51 60		
500	17 70	1 250	31 75	2 125	53 98		
593	15 06	1 312	33 32	2 266	57 56		

NOTES

1 Dimensions are in inches
2 Metric equivalents are given for general information only
3 Unless otherwise specified, tolerance is ± 016 (0 41 mm)
4 Material Aluminum alloy in accordance with QQ-A-250/8, temper H-32, 040 inch (1 02 mm) thick
5 Finish Anodize in accordance with MIL-A-8625, type I or type II

FIGURE [illegible] Shield retaining plate configurations Continued

REQUIREMENTS

Dimensions and configuration See figures 1, 2, 3, 4, 5 6, and 7

Mating connector See MIL-C-28748/4 and MIL-C-28748/6

Nuts As specified in guide pin configuration B Not required with shield

Part number As shown in the following example 1/

(See part number code)

M28748/5	A	C	1	H	L	1A
Basic number of specification sheet	Shell hardware 2/ designator (see figure 4 for configuration styles)	Insert designator (see figure 2)	Shield and shield clamp location or retaining plate (see figures 6 and 7)	Shell type and 3/ polarization (see figure 5)	Jackscrews or guidepins (see figure 1)	Contacts 4/

PART NUMBER CODE

Shell hardware 2/ designators	Insert designators	Number of contacts positions
A- long jackscrew hardware only	A	7
B- all other hardware	B	9
-- (insert only)	C	14
	D	20
	E	26
	F	34
	G	42
	H	50
	J	75
	K	104
	0 - No insert included	

Insert 7/ Designators through hole	
Q	34
P	42
N	50
M	75
L	104

Insert 8/ designators for piece part orders	
R	7
S	9
T	14
U	20
V	26
W	34
Y	42
1	50
3	75
5	104

Shield and 5/6/ shield clamp location or retaining plate	
1--top opening	
2--side opening	
3--top opening	
4--side opening	
A--	
B	
C	
D	-Retaining
E	plate
F	
G	
H	
J	
K--	
0--none included	

Through hole 7/ 8/ Insert designators for piece part orders
X
Z
2
4
6

Shell type and polarization designators		Polarization positions 3/
A--		A
B		B
C		C
D	-Receptacle	D
E	shells	E
F		F
G--		G
H---	Unpolarized	H
J--		A
K		B
L		C
M	-Plug	D
N	shells	E
P		F
Q--		G
R--Unpolarized		H
0--No shell included		

Contacts	Per MIL-C-28748
1A - 100 percent size 20	
1L - None included	

Jackscrews
or
guidepins

M - long jackscrews, multipiece construction, configuration E, figure 1
L - long jackscrews, one piece construction, configuration F, figure 1
S - short jackscrews, configuration D, figure 1 (not used with shield)
F - fixed jackscrews, configuration C, figure 1 (not used with shield)
G - guidepins, configuration B Figure 1
0 - none included 1/

Jack and guide location The male jackscrew (turning or fixed) or male guidepin shall be located by the "A" or "1" socket contact

1/ The number zero (0) is used to indicate which parts are not included

2/ Not applicable to size 7 insert designator A

3/ Polarization positions are for location of plug and receptacle shell pins and slots (see figure 4)

4/ Contacts In accordance with MIL-C-28748, 1A - 100 percent size 20 To order without contacts use the designator, 1L

5/ Screws MS35275-215 furnished with shield configurations, insert designators when required MS35275-229 furnished with shield configurations, insert designators when required Cross drilled hole is optional

6/ Shield configuration A is 1 and 2, and shield configuration B is 3 and 4

7/ Through hole insert configurations are used with long jackscrews only

8/ These designators are informational and used for insert reference (connector size) to order an appropriate shield or shell as a piece part

TABLE I Superseded specification and MS sheets

Specification or MS sheet	Date
MIL-C-28748/5	30 November 1981
MS18192	1 June 1983
MS18193	14 November 1988
MS18194	11 April 1974
MS18195	20 may 1970
MS18196	23 June 1972
MS18197	23 June 1972
MS18198	23 June 1972
MS18199	23 June 1972
MS18200	20 May 1970
MS18203	26 April 1990
MS18204	20 December 1965
MS18257	23 June 1972
MS18258	23 June 1972
MS18261	23 June 1972
MS18263	23 June 1972
MS24004	23 June 1972
MS24010	23 June 1972
MS24014	23 June 1972
MS24020	23 June 1972
MS24022	23 June 1972
MS24026	23 June 1972
MS24132	1 June 1976
MS24133	3 January 1979

Revision letters are not used due to the extensiveness of the changes

CONCLUDING MATERIAL

Custodians
Army - CR
Navy - EC
Air Force - 85

Review activities
Army - AT, MI
Navy - AS
Air Force - 11, 17, 99
DLA - ES

User activities
Army - AV, ME, AR
Navy - MC, OS, SH

Preparing activity
Navy - EC

Agent
DLA - ES

(Project 5935-3874-01)