INCH-POUND

MIL-C-28748/6D
25 March 1993
SUPERSEDING
MIL-C-28748/6C
30 November 1981

MILITARY SPECIFICATION SHEET

CONNECTORS, ELECTRICAL RECTANGULAR, RACK AND PANEL SOLDER TYPE SOCKET TYPE CONTACTS, SIZE 20

This specification is approved for use by all Departments and Agencies of the department of Defense

The requirements for acquiring the product described herein shall consist of this specification sheet and the issue of the following specification listed in that issue of the Department of Defense Index of Specifications and Standards (DODISS) specified in the solicitation MIL-C-28748

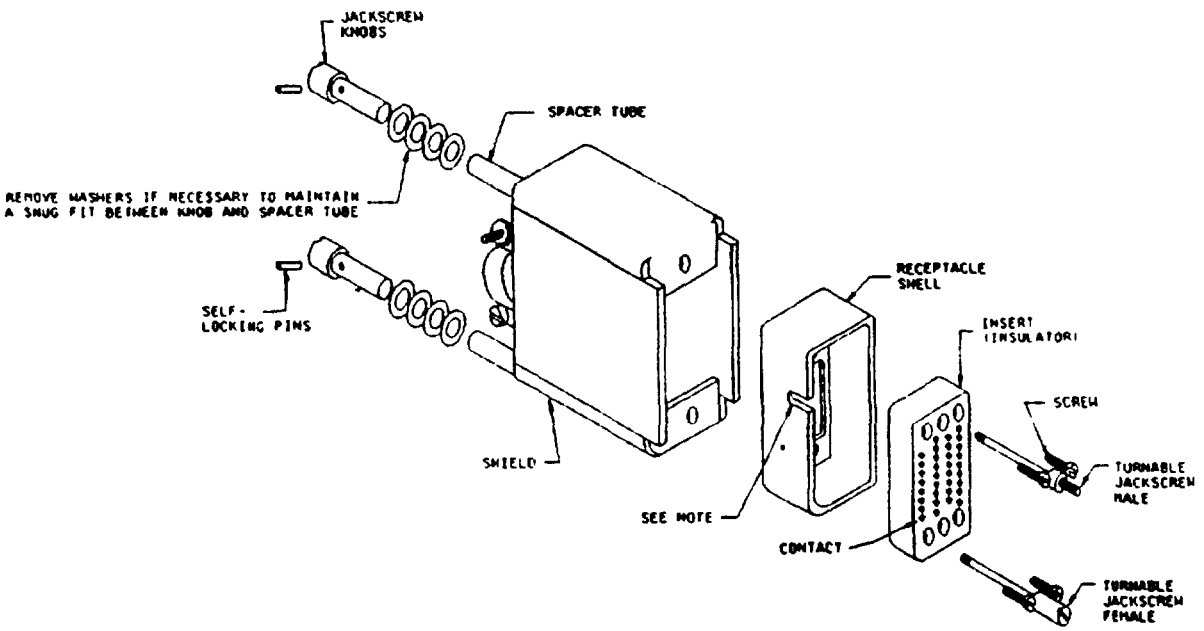

Note: The polarization feature (groove) on the receptacle shell shall be adjacent to the side closest to the number 1 or A contact position

Connector

Configuration A

FIGURE 1. Connector with shields, jackscrews, and guidepins

DISTRIBUTION STATEMENT A: Approved for public release; distribution is unlimited

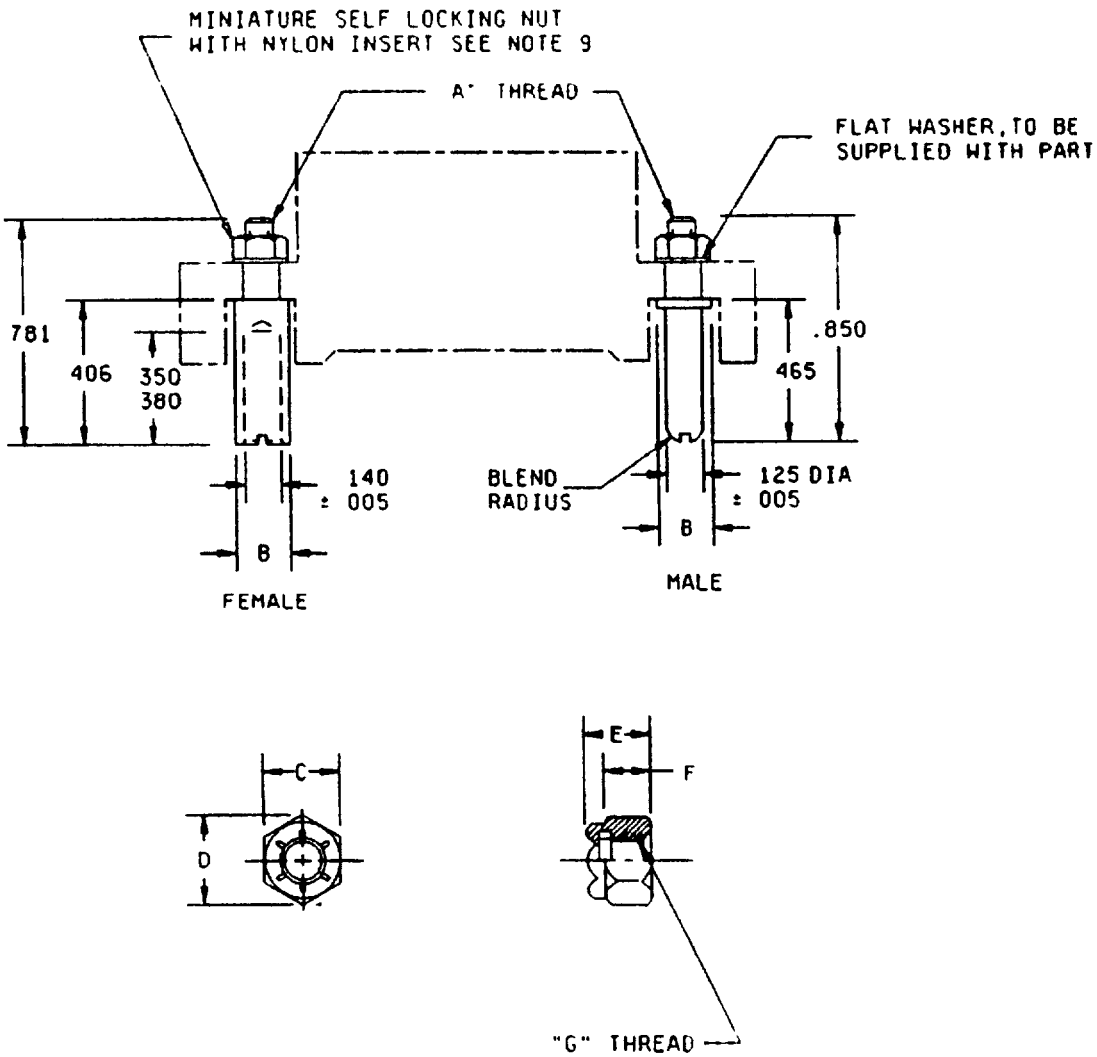

Connector size (no of contacts)	A thread	B dia max	C max min	D ref	E max min	F ref	G thread
7 through 75	112-40 UNC-2A	190 (4 82)	190 (4 82) 181 (4 59)	205 (5 20)	125 (3 17) 095 (2 41)	070 (1 77)	112-40 UNC-3B
104	138-32 UNC-2A	190 (4 82)	252 (6 40) 240 (6 90)	275 (6 98)	153 (3 88) 133 (3 37)	081 (2 05)	138-32 UNC-3B

Connector with guidepins

Configuration B

FIGURE 1 Connector with shields, jackscrews, and guidepins - Continued

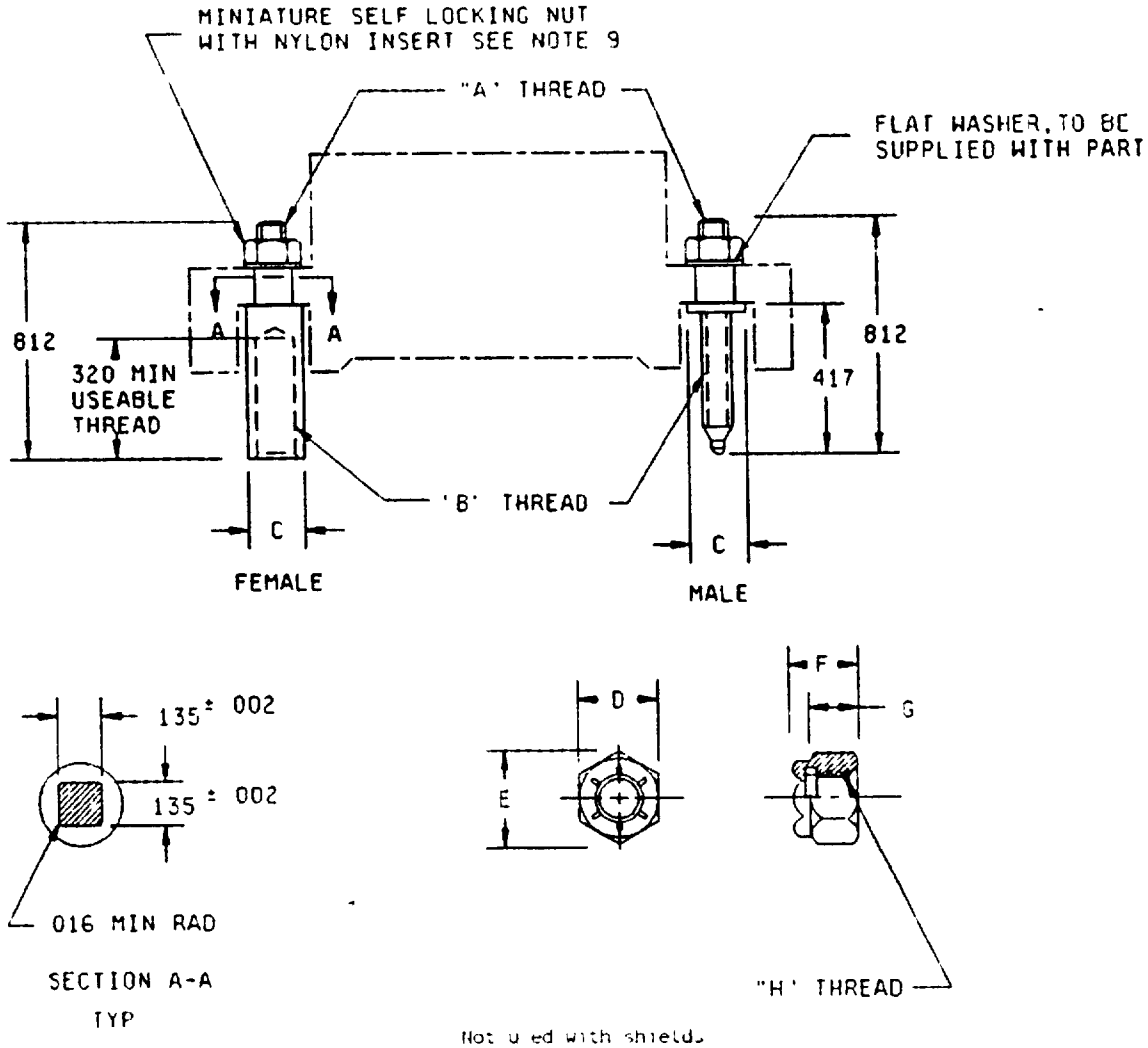

Not used with shields

Connector size (no of contacts)	A Thread	B Thread class 2	C dia max	D max min	E ref	F max min	G ref	H Thread
7 Through 75	112-40UNC-2A	138-32 UNC	0 190 (4 82)	0 190 (4 82) 0 095 (2 41)	0 205 (5 20)	0 125 (3 17) 0 095 (2 41)	0 070 (1 77)	112-40 UNC-3B
104	138-32 UNC-2A	164-32 UNC	0 225 (5 63)	0 252 (6 40) 0 240 (6 09)	0 275 (6 98)	0 153 (1 35) 0 133 (3 37)	0 081 (2 05)	138-32 UNC-3B

Connector with fixed jackscrews

Configuration C

FIGURE 1 Connector with shields, jackscrews, and guidepins - Continued

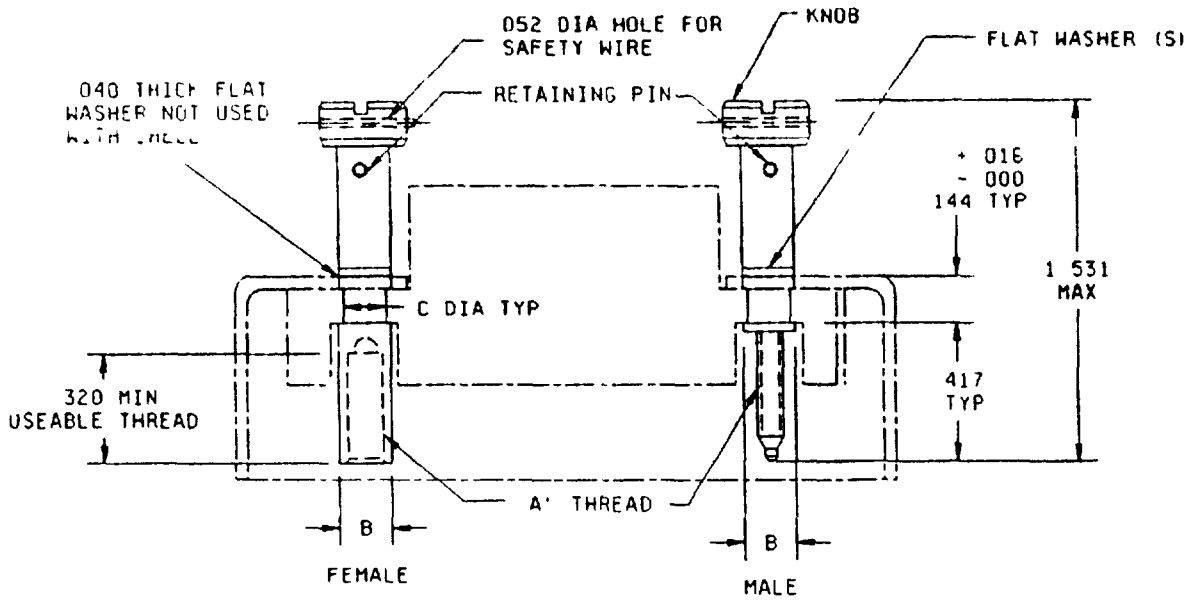

Not used with shields

Connector size (no of contacts)	A thread class 2	B dia max	C dia ± 003
7 through 75	138-32 UNC-2A	190 (4 82)	115 (2 92)
104	164-32 UNC-2A	225 (5 71)	137 (4 48)

Connector with short turnable jackscrews

Configuration D

FIGURE 3 Connector with shields, jackscrews, and guidepins - Continued

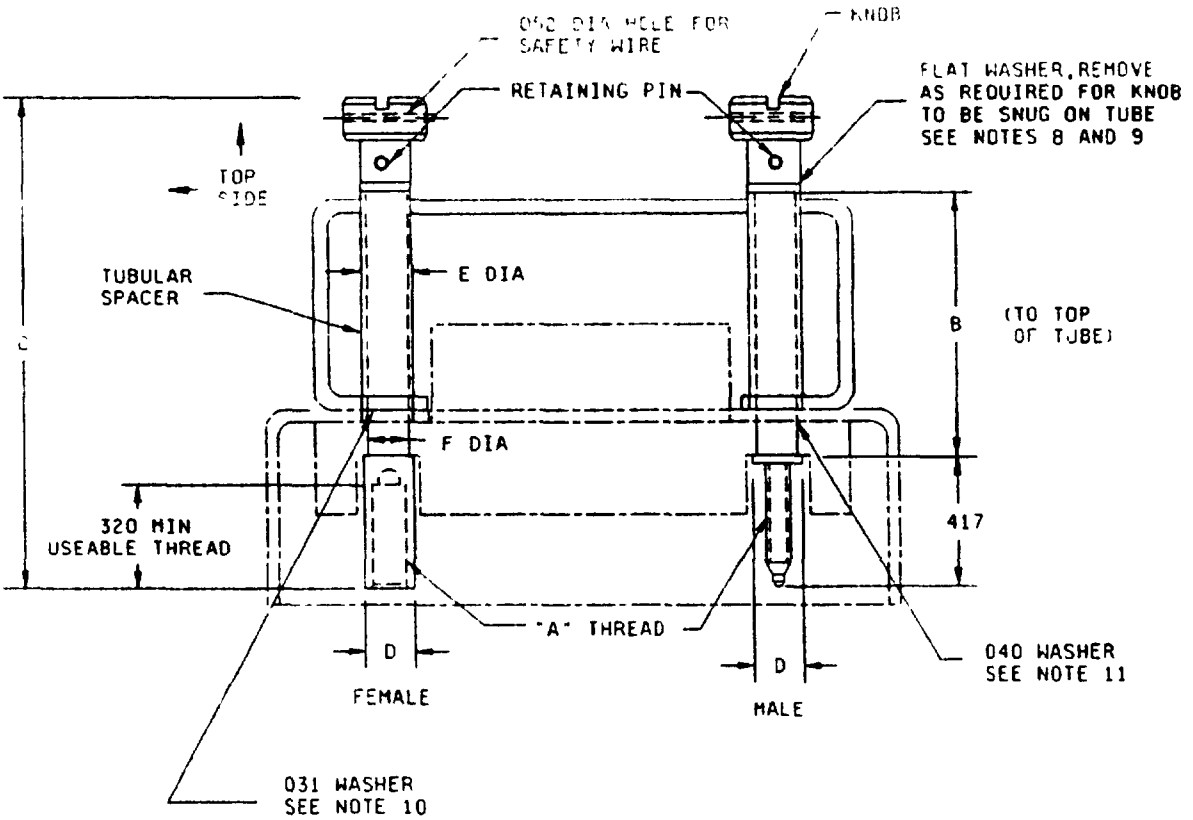

Multipiece construction

For use with shield, configuration A, insert designator A through E, and configuration B, insert designator F through J Plug shell, insert designator A through K, and receptacle shell, insert designator A through K

Connector size (no of contacts)	A thread class 2	B	C max	D dia max	E dia ± 004 (C 10)	F dia ± 003 (0 07)
7 through 75	138-32 UNC	1 500 (38 10)	2 467 (62 66)	190 (4 82)	188 (4 77)	115 (2 91)
104	164-32 UNC	2 495 (63 37)	3 438 (87 32)	225 (5 71)	219 (5 56)	137 (3 47)

Connector with long turnable jackscrews and shield

Configuration E

FIGURE 1 Connector with shields, jackscrews, and guidepins - Continued

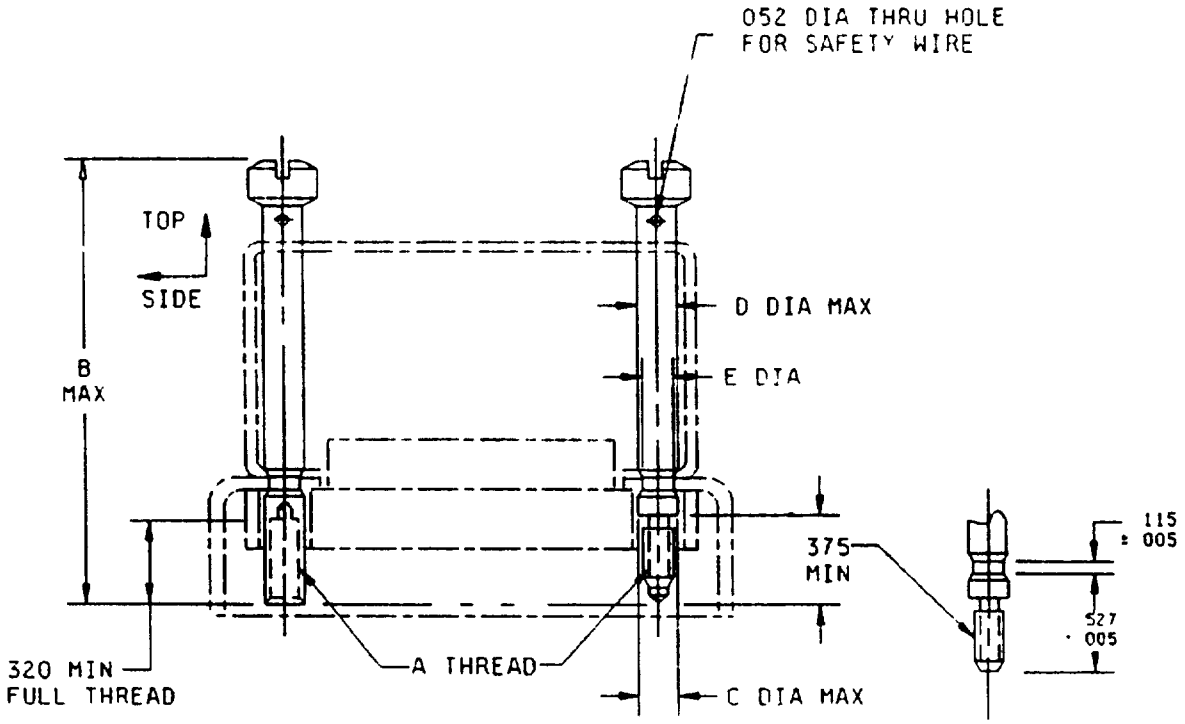

One piece construction

For use with shield configurations A and B, insert designators L through Q. For use with plug or receptacle shells, insert designator L through Q.

When plug or receptacle shells, insert designators L through Q are required to be used with a shield, use with shield configuration A, insert designators A through E or shield configuration B, insert designator K.

Connector size (no. of contacts)	A thread class 2	B max	C dia max	D dia max	E dia ± 002 (0.05)
34, 42, 50, 75	138-32 UNC	2 438 (61 93)	192 (4 88)	192 (4 88)	1 (2 82)
104	164-32 UNC	3 282 (83 36)	225 (5 72)	225 (5 72)	140 (3 56)

Connector with long turnable jackscrews and shield

Configuration E

FIGURE [illegible] Connectors with shields, jackscrews, and guidepins. (continued)

Inches	mm	Inches	mm	Inches	mm
002	0 05	137	3 48	350	8 89
003	0 08	138	3 51	380	9 65
004	0 10	140	3.56	406	10 31
005	0 13	144	3 60	417	10 59
.016	0 41	153	3 89	465	11 81
031	0 79	181	4.60	781	19 84
040	1 02	188	4 78	812	20 62
052	1 32	190	4 83	850	21 59
070	1 78	205	5 21	1 500	38 10
081	2 06	219	5 56	1 531	38 88
095	2 41	.225	5 72	2 467	62 66
115	2 92	240	6 10	2 495	63 37
125	3 18	252	6 40	3 438	87 33
133	3 38	272	6 91		
135	3 43	320	8 13		

NOTES

1. Dimensions are in inches
2. Metric equivalents are given for general information only
3. Unless otherwise specified, tolerance is ± 016 (0 41 mm)
4. Dimensions and configuration shall be in accordance with above figure
5. Fixed jackscrews configuration C may have 005 (0 13 mm) minimum vertical float
6. Materials for jackscrews and guidepins Corrosion-resistant steel in accordance with QQ-S-763, class 302, 303, 303Se, 304 or 316, ASTM A484, or ASTM A582 except for aluminum alloy knob, tubular spacer, and 040 (1 02 mm) washer
7. Finish passivated in accordance with QQ-P-35 except for anodized knob on multipiece construction
8. Lubricant Solid film lubricant on "A" thread conforming to MIL-L-46010
9. Miniature self-locking nut with nylon insert shall be in accordance with notes 6 and 7
10. Washer 031 (0 79 mm) thick, not used with shields 20 and smaller
11. Washer 040 (1 02 mm) thick supplied with all sizes, not used with shell

FIGURE 1 Connector with shells, jackscrews, and guidepins - Continued

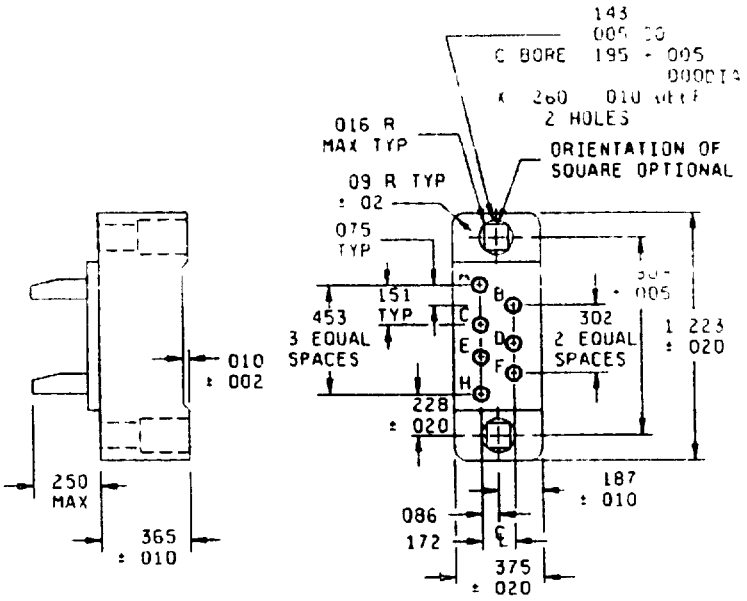

Insert with 7 contacts

Configuration A

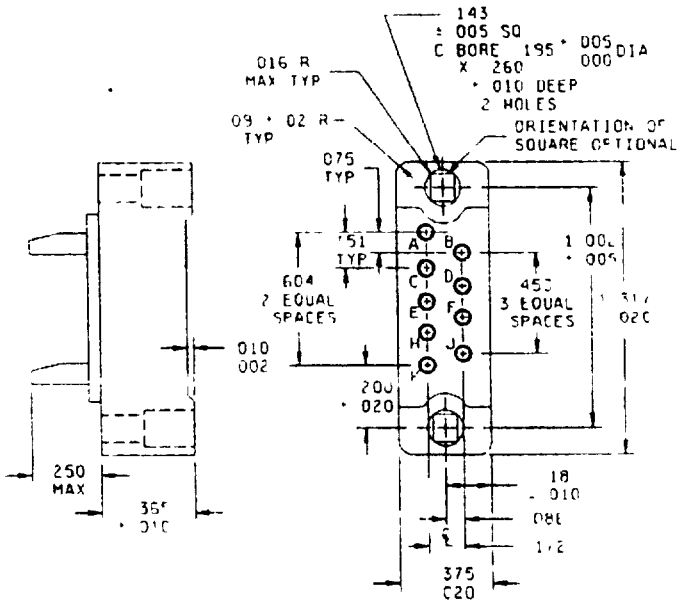

Insert with 9 contacts

Configuration B

FIGURE 2 Insert arrangements

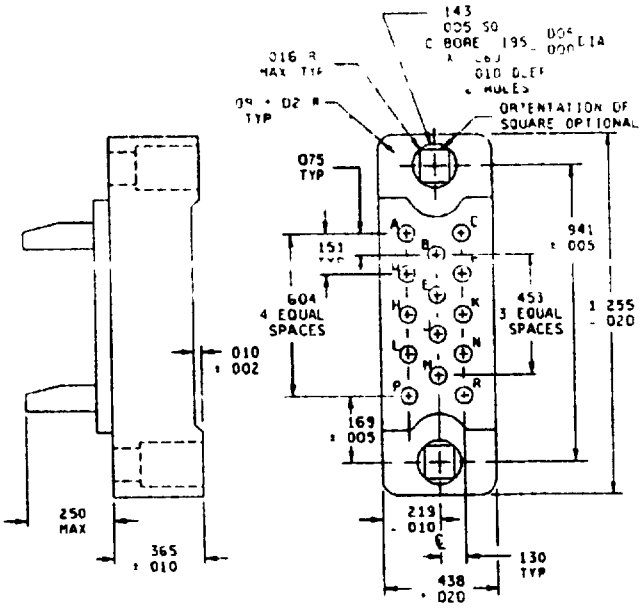

Insert with 14 contacts

Configuration C

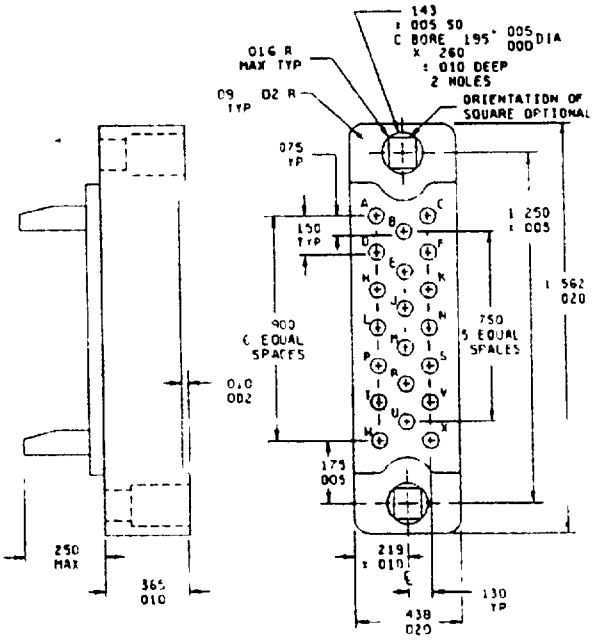

Insert with 20 contacts

Configuration D

FIGURE 2 Insert arrangements - Continued

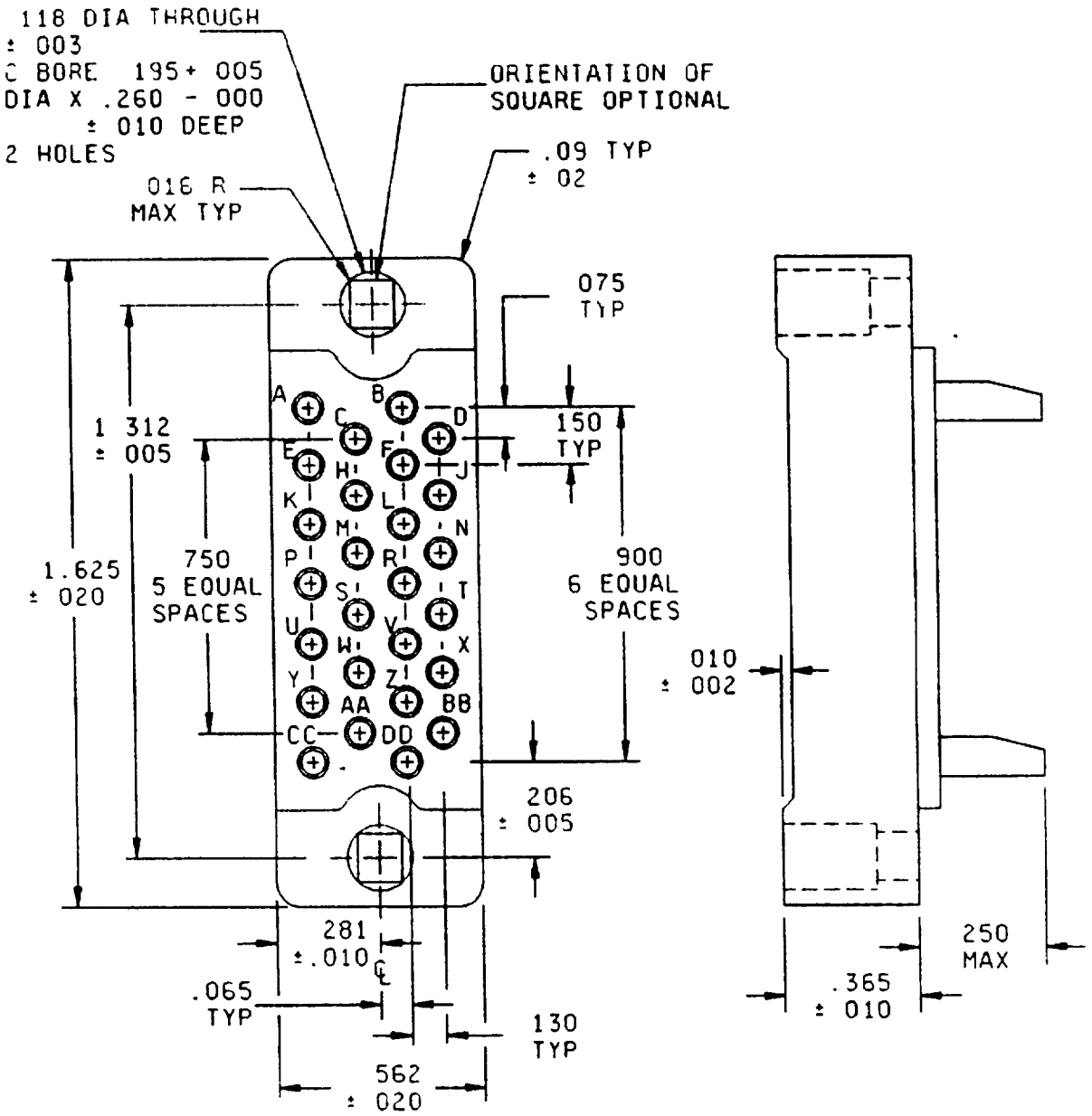

Insert with 26 contacts

Configuration E

FIGURE 2 Insert arrangements - Continued

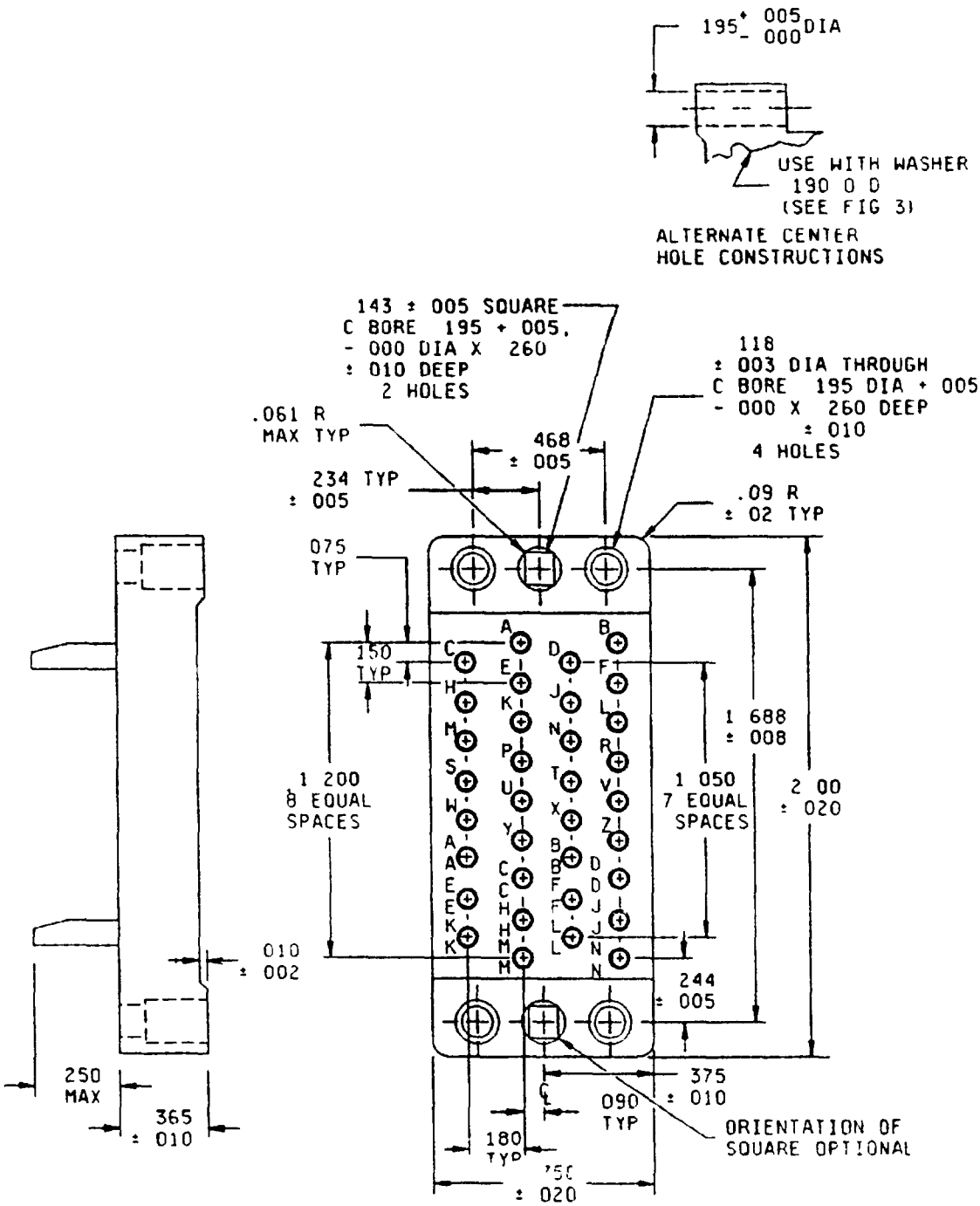

Configuration Q (X) for long jackscrews and hood only (thru hole alternate construction)

Insert with 34 contacts

Configurations F (W) and Q (X)

FIGURE 2 Insert arrangements - Continued

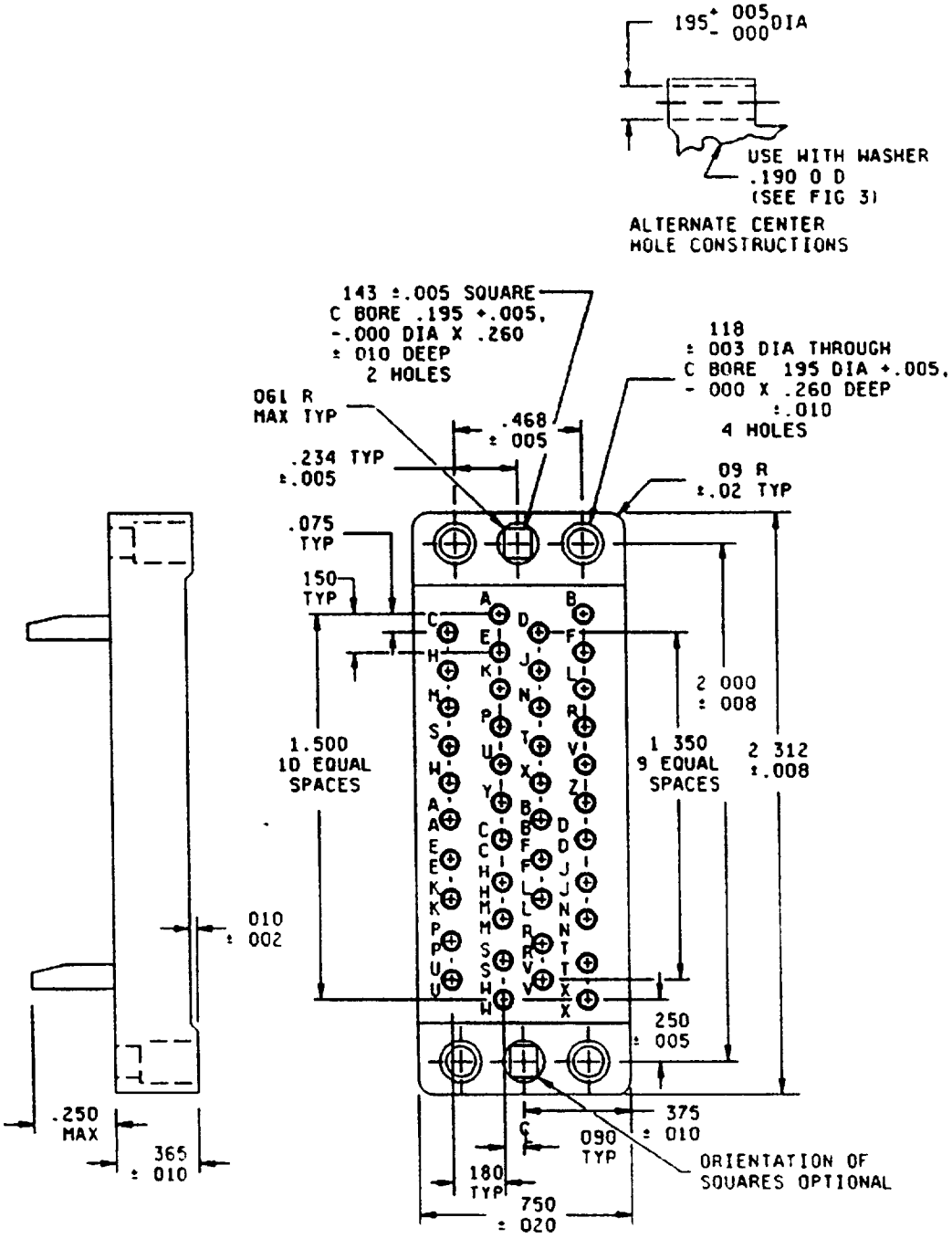

Configuration P (Z) for long jackscrews and hood only (thru hole alternate construction)

Insert with 42 contacts

Configurations G (Y) and P (Z)

FIGURE 2 Insert arrangements - Continued

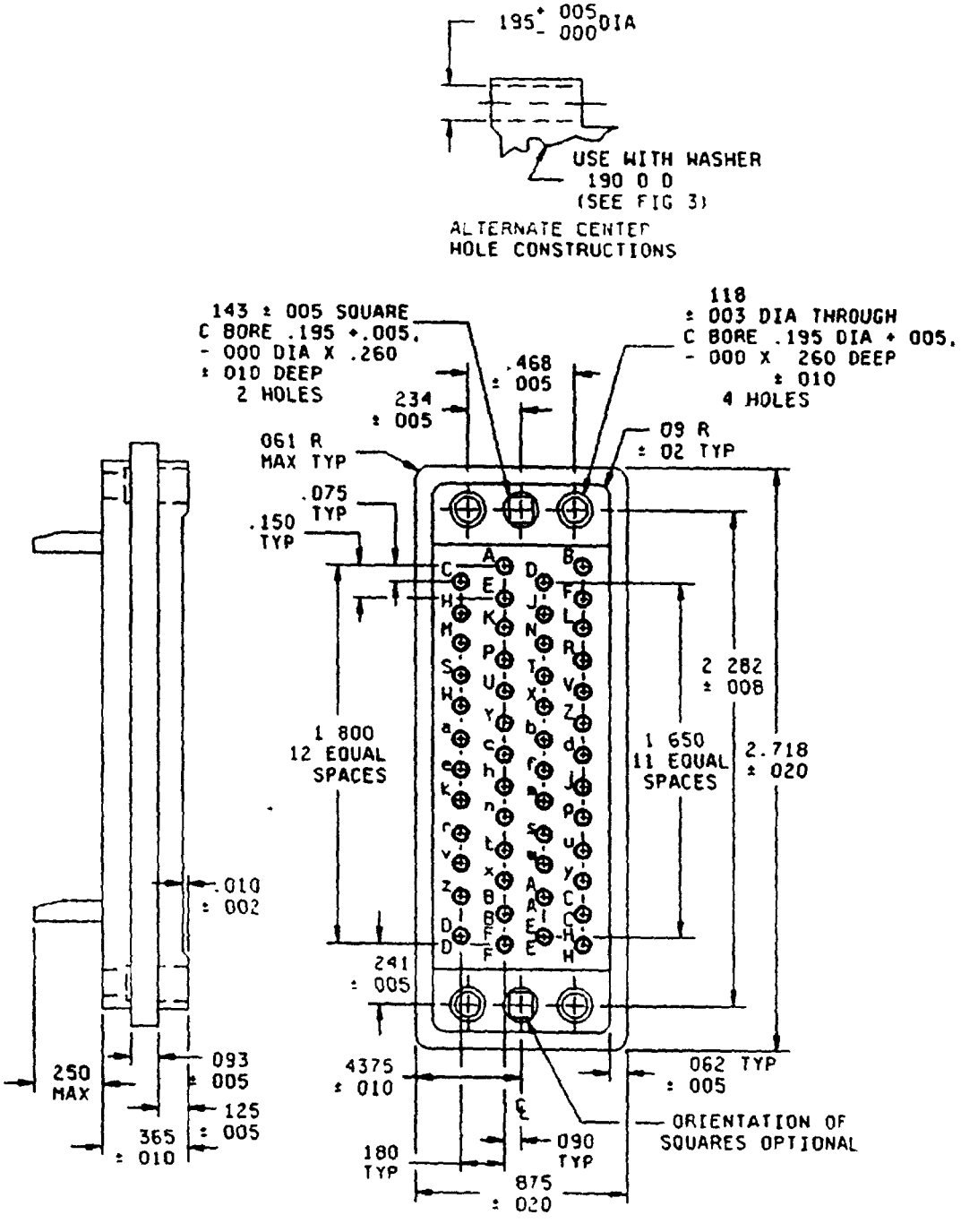

Configuration N (2) for long jackscrews and hood only (thru hole alternate construction)

Insert with 50 contacts

Configurations H (1) and N (2)

FIGURE 2. Insert arrangements - Continued

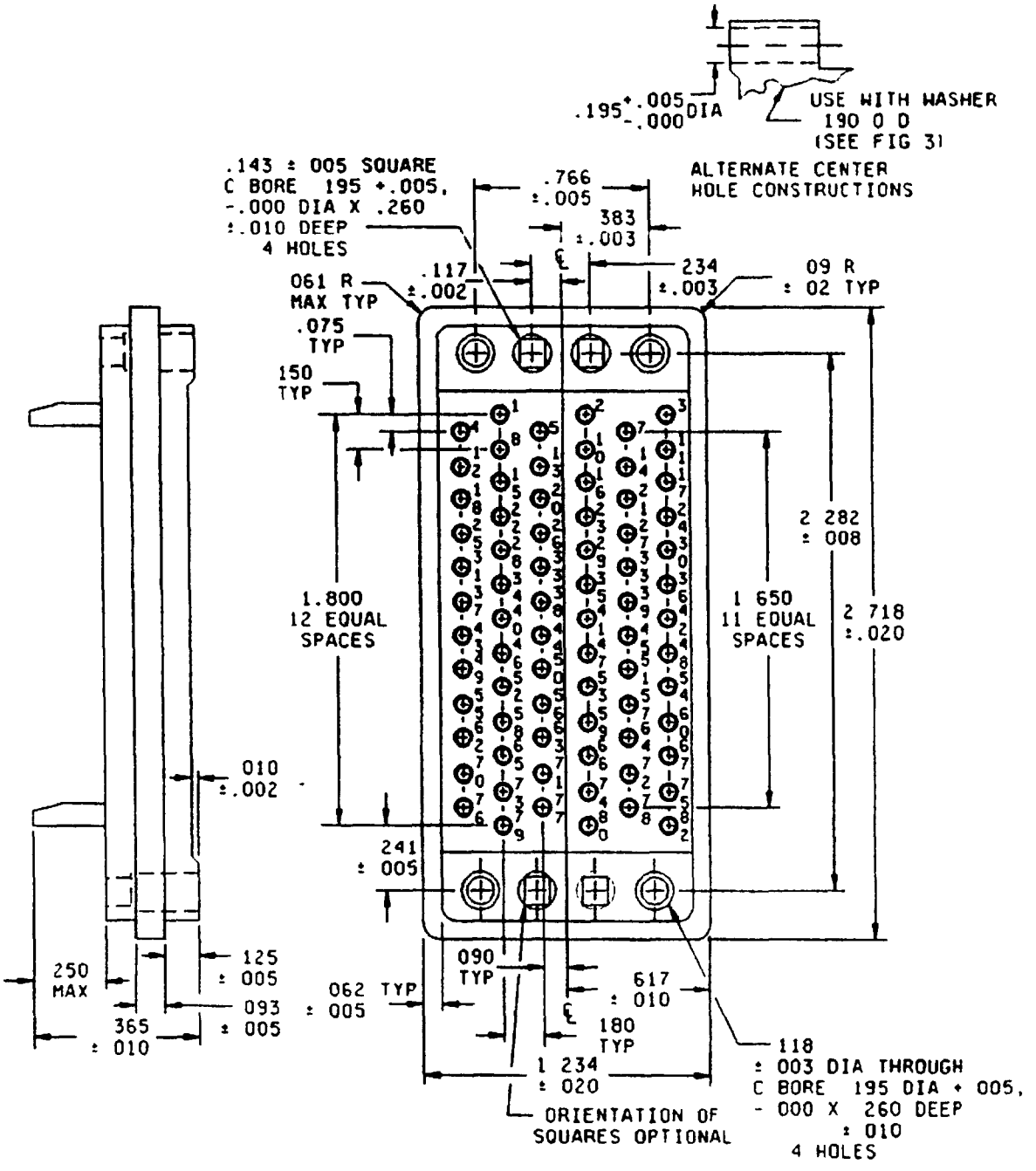

Configuration M (4) for long jackscrews and hood only (thru hole alternate construction)

Insert with 75 contacts

Configurations J (3) and M (4)

FIGURE 2 Insert arrangements - Continued

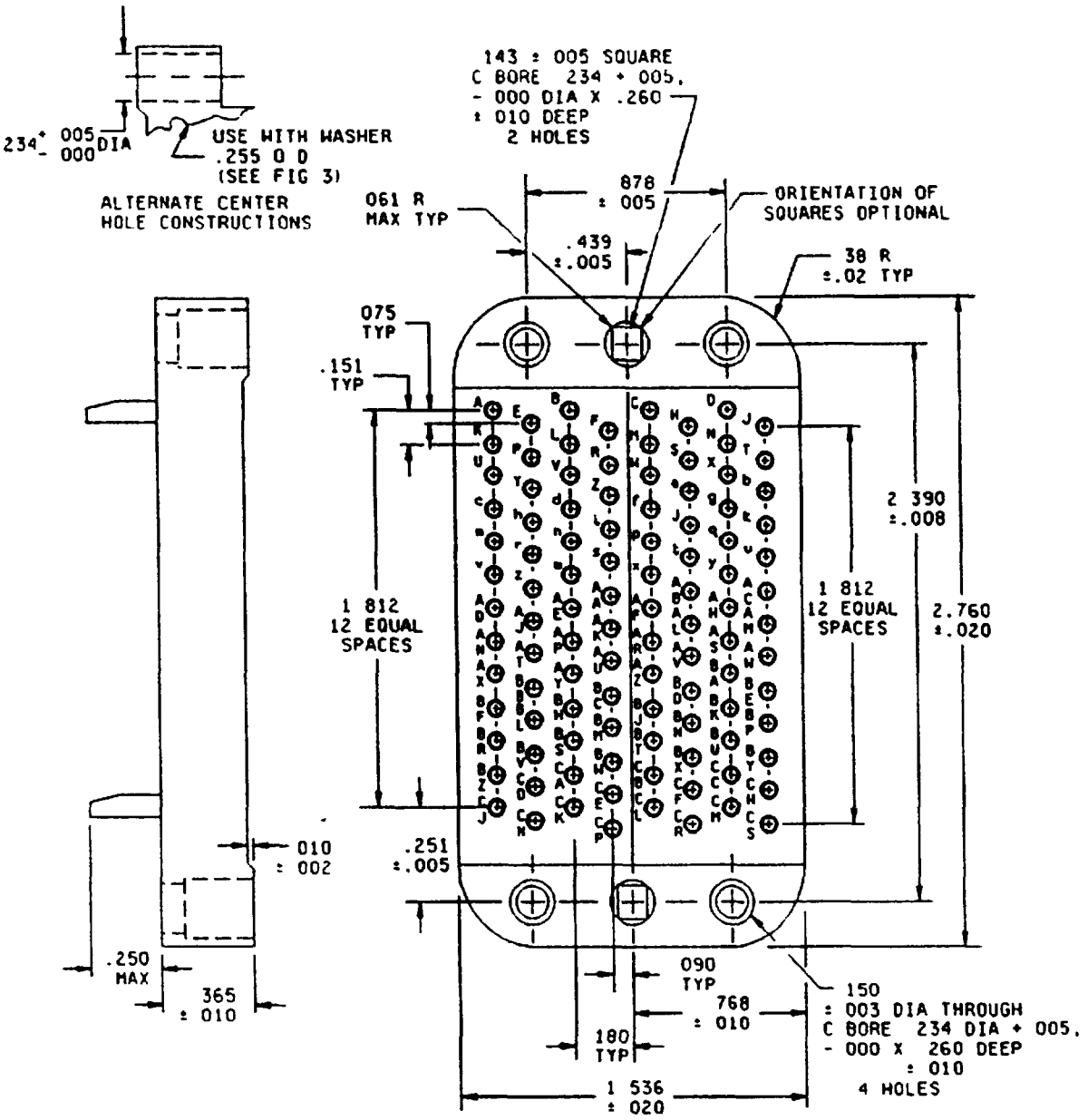

Configuration L (6) for long jackscrews and hood only (thru hole alternate construction)

Insert with 104 contacts

Configurations K (5) and L (6)

FIGURE 2 Insert arrangements - Continued

Inches	mm	Inches	mm	Inches	mm	Inches	mm
002	0 05	153	3 89	4375	11 113	1 312	31 32
003	0 08	172	4 37	438	11 13	1 317	33 45
005	0 13	175	4 45	.439	11 15	1.350	34 29
008	0 20	180	4 57	452	11 48	1 500	38.10
010	0.25	187	4 75	453	11 51	1 536	39.01
016	0.41	190	4 83	468	11 89	1 562	39 67
020	0 51	195	4 95	562	14 27	1 625	41 28
062	1.57	200	5 08	603	15 32	1 650	41 91
065	1.65	.206	5 23	617	15 63	1.688	42 67
070	1 78	219	5 56	750	19 05	1 812	46 02
075	1 91	228	5 79	766	19 46	2 000	50 80
086	2 18	234	5 94	768	19 51	2 282	57 96
090	2 29	240	6 10	875	22 23	2 312	57 72
093	2.36	241	6 12	878	22 30	2 390	60 71
110	2.79	.244	6 20	900	22 86	2 718	69 04
118	3 00	250	6 35	909	23 09	2 760	70 10
125	3 18	251	6 38	941	23 90		
130	3 30	260	6 60	1 002	25 45		
133	3 38	272	6 91	1 050	26 67		
143	3 63	281	7 14	1 200	30 48		
150	3 81	302	7 67	1 223	31 06		
151	3 84	365	9 27	1 234	31 34		
160	3 89	375	9 53	1 250	31 75		
169	4 29	380	9 65	1 255	31 88		

NOTES

1. Dimensions are in inches
2. Metric equivalents are given for general information only
3. Unless otherwise specified, tolerance is ± 015 (0 38 mm)
4. Tolerance between any two adjacent contact centers shall be ± 004 (0 10 mm) Tolerance between any two contact centers, other than adjacent centers, shall be ± 006 (0 15 mm)
5. Dimensions and configuration shall be in accordance with above figure
6. Contact identification may be located on either side of the contact hole but shall appear on the front and rear of each insert

FIGURE 2 Insert arrangements - Continued

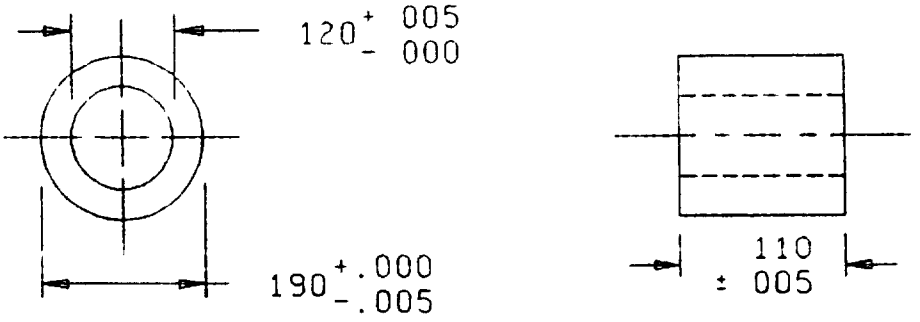

For use with inserts with 34, 42, 50, and 75 contacts

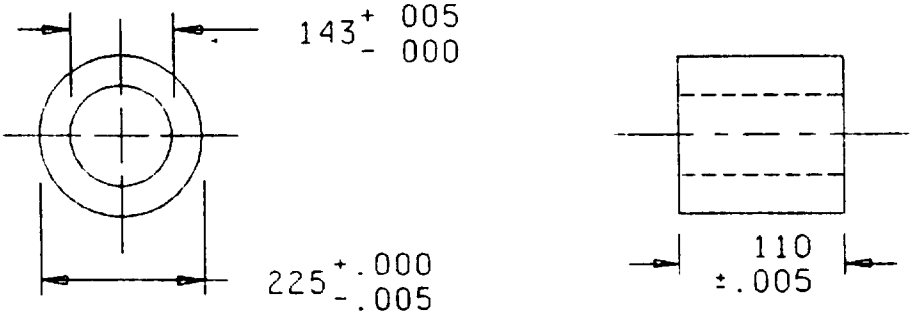

For use with inserts with 104 contacts

Inches	mm
005	0 13
110	2 79
120	3 05
143	3.63
190	4 83
225	5 72

NOTES

1. Dimensions are in inches
2. Unless otherwise specified, tolerance is ± 015 (0 38 mm)
3. Material Corrosion resistant steel, in accordance with QQ-S-763 or QQ-S-764, class 32, 303, 303Se, 304 or 316
4. Finish Passivated in accordance with QQ-P 35

FIGURE 3 Washer

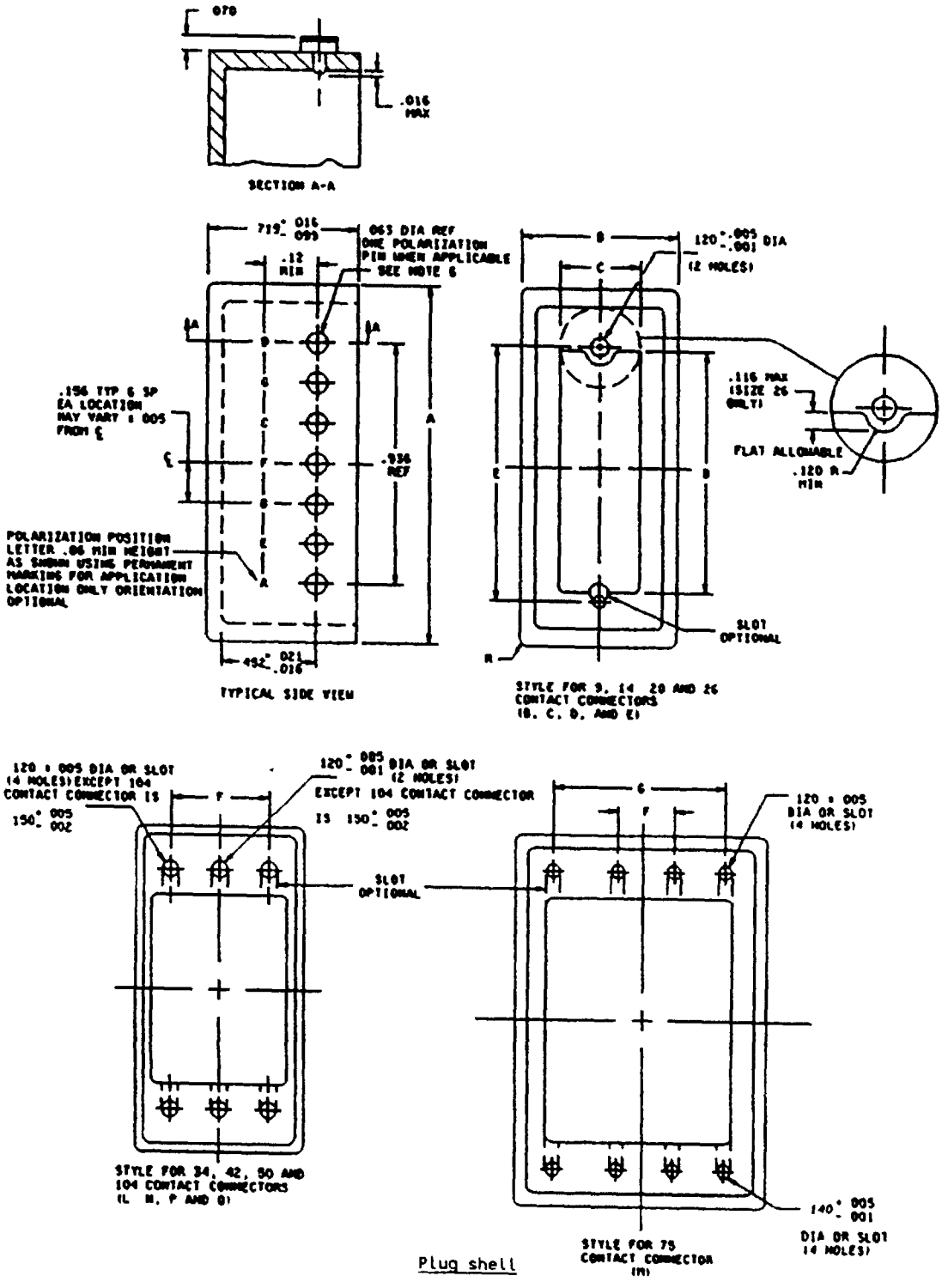

Plug shell

configuration A

FIGURE 4 Shell configurations

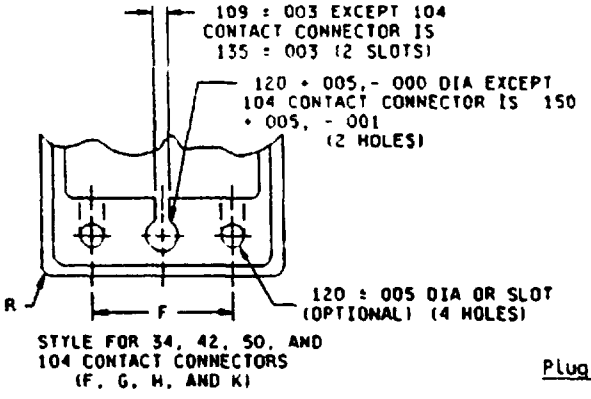

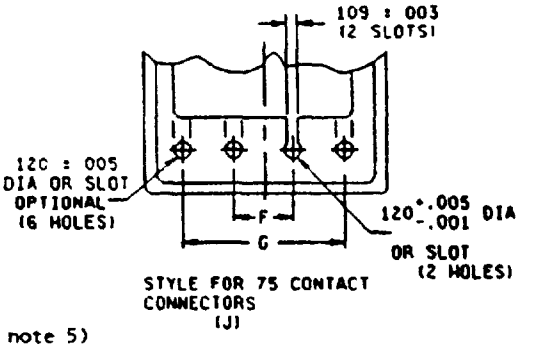

Plug shell

Configuration B (see note 5)

Insert designator (see note 7)	Connector size (number of contacts)	A max	B max	C min	D min	E ±.005 (0 13)	F ±.005 (0 13)	G ±.005 (0 13)	R
B (S)	9	1 440 (36 57)	500 (12 70)	375 (9 52)	864 (21 94)	1 000 (25 40)	-----	-----	141 (3 58)
C (T)	14	1 380 (35 05)	567 (14 40)	440 (11 17)	800 (20 32)	938 (23 82)	-----	-----	141 (3 58)
D (U)	20	1 700 (43 18)	567 (14 40)	440 (11 17)	1 097 (27 86)	1.250 (31 75)	-----	-----	141 (3 58)
E (V)	26	1 755 (44 57)	688 (17 47)	565 (14 35)	1 182 (30 02)	1 312 (33 32)	-----	-----	141 (3 58)
F (W) or Q (X)	34	2 130 (54 10)	880 (22 35)	745 (18 92)	1 400 (35 56)	1 688 (42 87)	468 (11 88)	-----	141 (3 58)
G (Y) or P (Z)	42	2 442 (62 02)	880 (22 35)	745 (18 92)	1 700 (43 18)	2 000 (50 80)	468 (11 88)	-----	141 (3 58)
H (1) or N (2)	50	2 846 (72 28)	1.005 (25 52)	745 (18 92)	2 026 (51 46)	2.281 (57 93)	468 (11 88)	-----	141 (3 58)
J (3) or M (4)	75	2 850 (72 39)	1 365 (34 67)	1 104 (28 04)	2 026 (51 46)	2 281 (57 93)	234 (5 94)		187 (4 74)
K (5) or L (6)	104	2 890 (73 40)	1 670 (42 18)	1 476 (37 49)	2 073 (52 50)	2 375 (60 32)	875 (22 22)	-----	422 (10 71)

Plug shell

Configuration A and B

FIGURE 4. Shell configurations - Continued

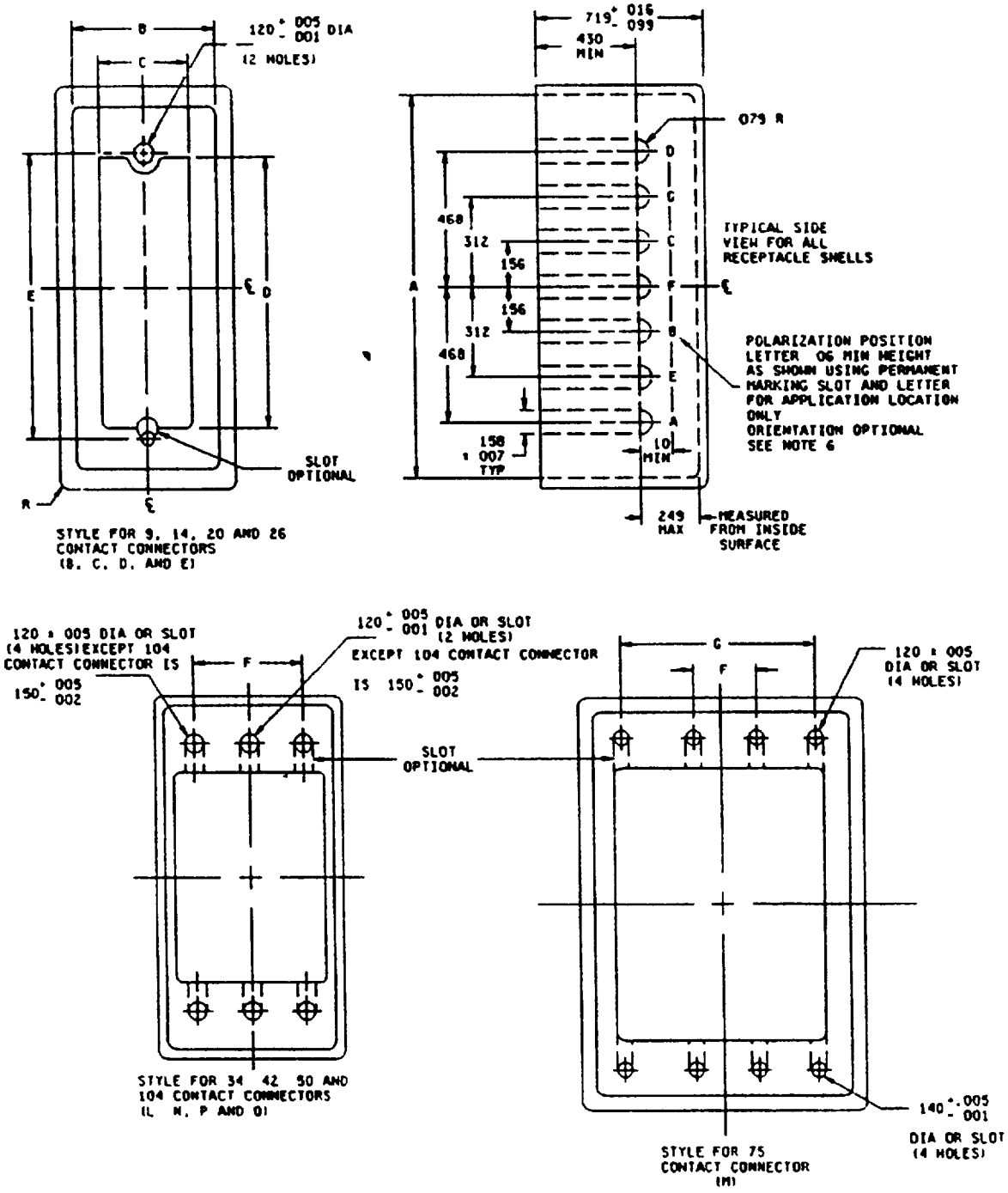

Receptacle shell

Configuration A

FIGURE 4 Shell configurations - continued

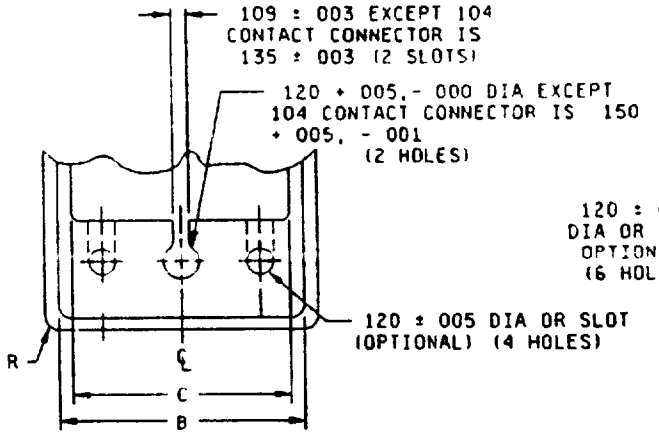

STYLE FOR 34, 42, 50, AND
104 CONTACT CONNECTORS
(F, G, H, AND K)

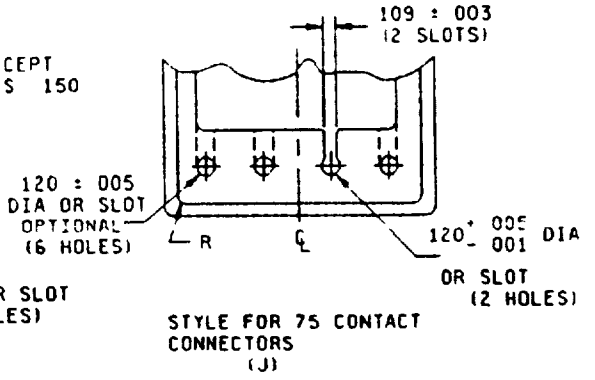

STYLE FOR 75 CONTACT
CONNECTORS
(J)

Receptacle shell

Configuration B (see note 5)

Insert designator (see note 7)	Connector size (number of Contacts)	A min	B min	C min	D min	E ± 005 (0 13)	F ± 005 (0 13)	G ± 005 (0 13)	R
B (S)	9	1 448 (36 77)	512 (13 00)	375 (9 52)	864 (21 94)	1 000 (25 40)	-----	-----	141 (3 58)
C (U)	14	1 388 (35 25)	575 (14 60)	440 (11 17)	800 (20 32)	938 (23 82)	-----	-----	141 (3 58)
D (U)	20	1 702 (43 23)	575 (14 60)	440 (11 17)	1 097 (27 86)	1 250 (31 75)	-----	-----	141 (3 58)
E (V)	26	1 763 (44 78)	696 (17 67)	565 (14 35)	1 182 (30 02)	1 312 (33 32)	-----	-----	141 (3 58)
F (W) or Q (X)	34	2 138 (54 30)	888 (22 55)	745 (18 92)	1 400 (35 56)	1 688 (42 87)	468 (11 88)	-----	141 (3 58)
G (Y) or P (Z)	42	2 450 (62 23)	888 (22 55)	745 (18 92)	1 700 (43 18)	2 000 (50 80)	468 (11 88)	-----	141 (3 58)
H (1) or N (2)	50	2 856 (72 54)	1 015 (25 78)	745 (18 92)	2 026 (51 46)	2 281 (57 93)	468 (11.88)	-----	.188 1/ (4.77)
J (3) or M (4)	75	2 855 (72 51)	1 370 (34 79)	1 104 (28 04)	2 026 (51 46)	2 281 (57 93	234 (5 94)	766 (19 45)	203 (5 15)
K (5) or L (6)	104	2 900 (73 66)	1 680 (42 67)	1 476 (37 49)	2 073 (52 65)	2 375 (60 32)	875 (22 22)	-----	422 (10 71)

1/ Tolerance + 020 inch (0 50 mm), - 016 inch (0 40 mm)

Receptacle shell

Configurations A and B

FIGURE 4 Shell configurations Continued

Inches	mm	Inches	mm	Inches	mm	Inches	mm	Inches	mm
001	0 03	187	4 75	766	19 46	1.380	35.05	2 420	61 47
.002	0 05	188	4 78	800	20 32	1 400	35.56	2 442	62 03
003	0 08	203	5 16	864	21 94	1 440	36.58	2 450	62 23
005	0 13	234	5.94	875	22 22	1 448	3 78	2 846	72 29
007	0 18	249	6 32	880	22 35	1 476	37 49	2 850	72 39
016	0 41	312	7 92	888	22 56	1 670	42 42	2 855	72 52
020	0 51	375	9 52	936	23 77	1 680	42.67	2 856	72 54
021	0 53	422	10 72	938	23 82	1 688	42.88	2 890	73 41
.060	1 52	430	10 92	1 000	25 40	1.696	43.08	2 900	73 66
099	2 51	440	11 18	1 005	25 53	1 700	43 18		
100	2 54	452	11.48	1 015	25 78	1 702	43 23		
104	2 64	468	11 89	1 097	27 86	1 755	44.58		
109	2 77	500	12 70	1 104	28.04	1 969	50 01		
116	2 95	512	13 00	1 115	28 32	2 000	50.80		
120	3 05	565	14 35	1 182	30 02	2 026	51 46		
135	3 43	567	14 40	1 250	31 75	2.073	52 65		
140	3 56	575	14 60	1 254	31 85	2 130	54.10		
141	3 58	688	17 48	1 264	32 10	2 138	54.30		
150	3 81	696	17 68	1 312	33 32	2 281	57 94		
156	3 96	719	18 26	1 365	34 67	2 375	60 32		
158	4 01	745	18 92	1 370	34 80	2 410	61 21		

NOTES

1 Dimensions are in inches
2 Unless otherwise specified, tolerance is ± 016 (0 41 mm)
3 Material Aluminum alloy in accordance with QQ-A-250/8, temper 0, or QQ-A-250/1, temper H12, 040 inch (1 02 mm)
4 Finish Anodize in accordance with MIL-A-8625, type I or type II
5 Not used with one piece jackscrews shields of figure 2, configuration B
6 The part number includes the polarization letter from figure Use the letter "R" if polarization is not required
7 Insert designators in parentheses are for piece part ordering data

FIGURE 4 Shell configurations - Continued

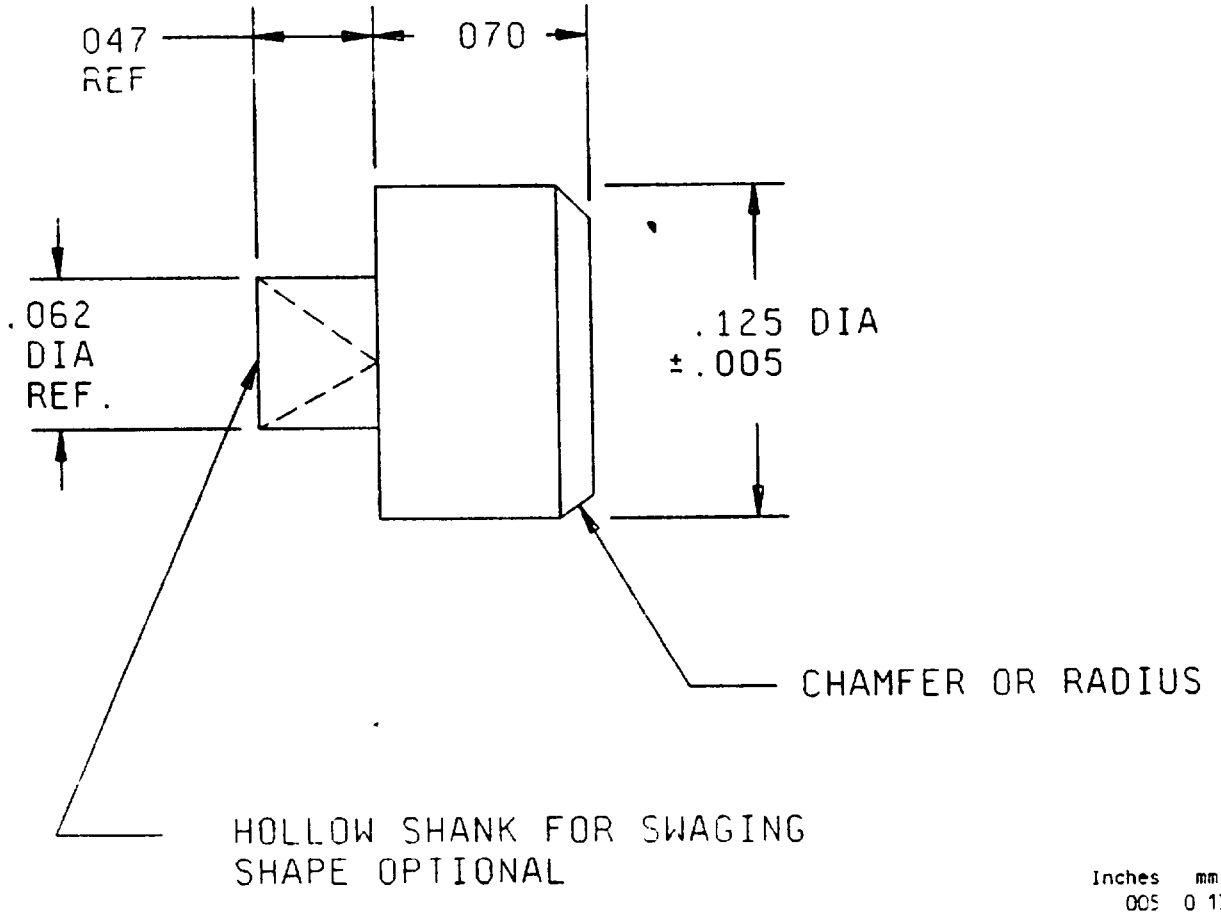

Inches	mm
005	0 13
047	1 19
062	1 57
070	1 78
125	3 18

NOTES
1. Dimensions are in inches
2. Unless otherwise specified, tolerance is ± 016 (0 41 mm)
3. Metric equivalents are given for general information only
4. Material Corrosion resistant steel in accordance with QQ-S-763 class 302 303, 303Se 304 or 316 or ASTM A484, or ASTM A53[illegible]

Pin , straight headed

Configuration

FIGURE 5 Pin configuration

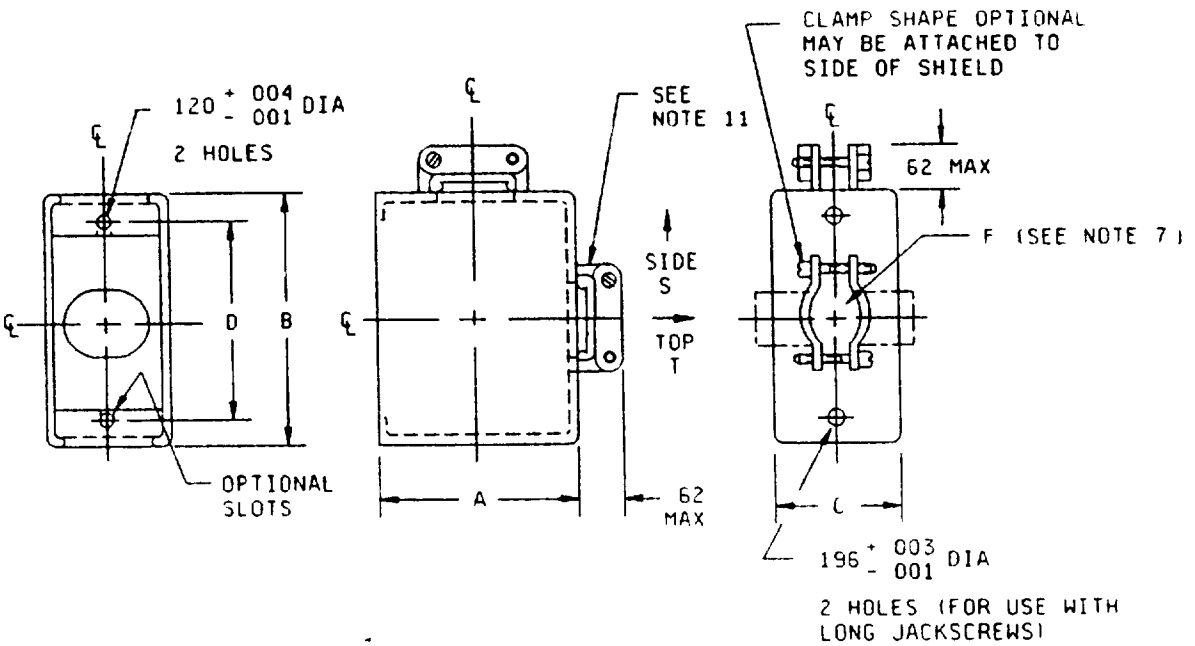

For use with insert configurations A (R), B (S), C (T), D (U), and E (V)

Shield

Configuration A

FIGURE 6 Shield configurations

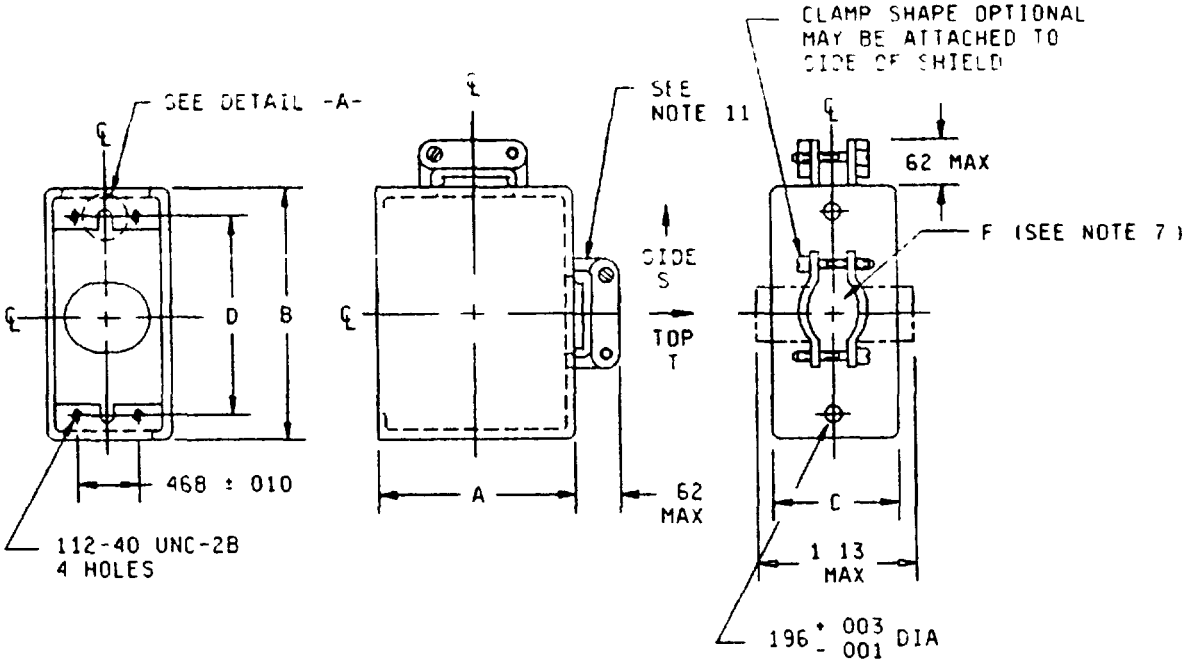

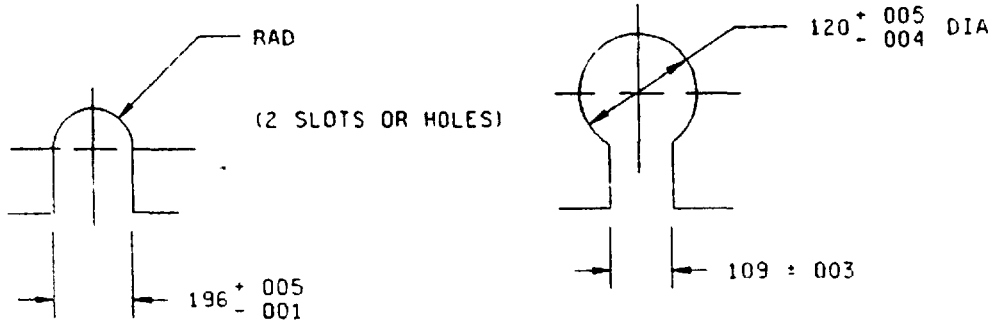

STYLE FOR 34,42,AND
50 CONTACT CONNECTOR
(F G,AND H)

ALTERNATE CONFIGURATIONS
(N,P, AND Q)
SEE NOTE 10

DETAIL -A-

For use with insert configurations F (W), G (Y), H (1), N (2), P (Z), and Q (X)

Shield

Configuration A

FIGURE 6 Shield configurations - Continued

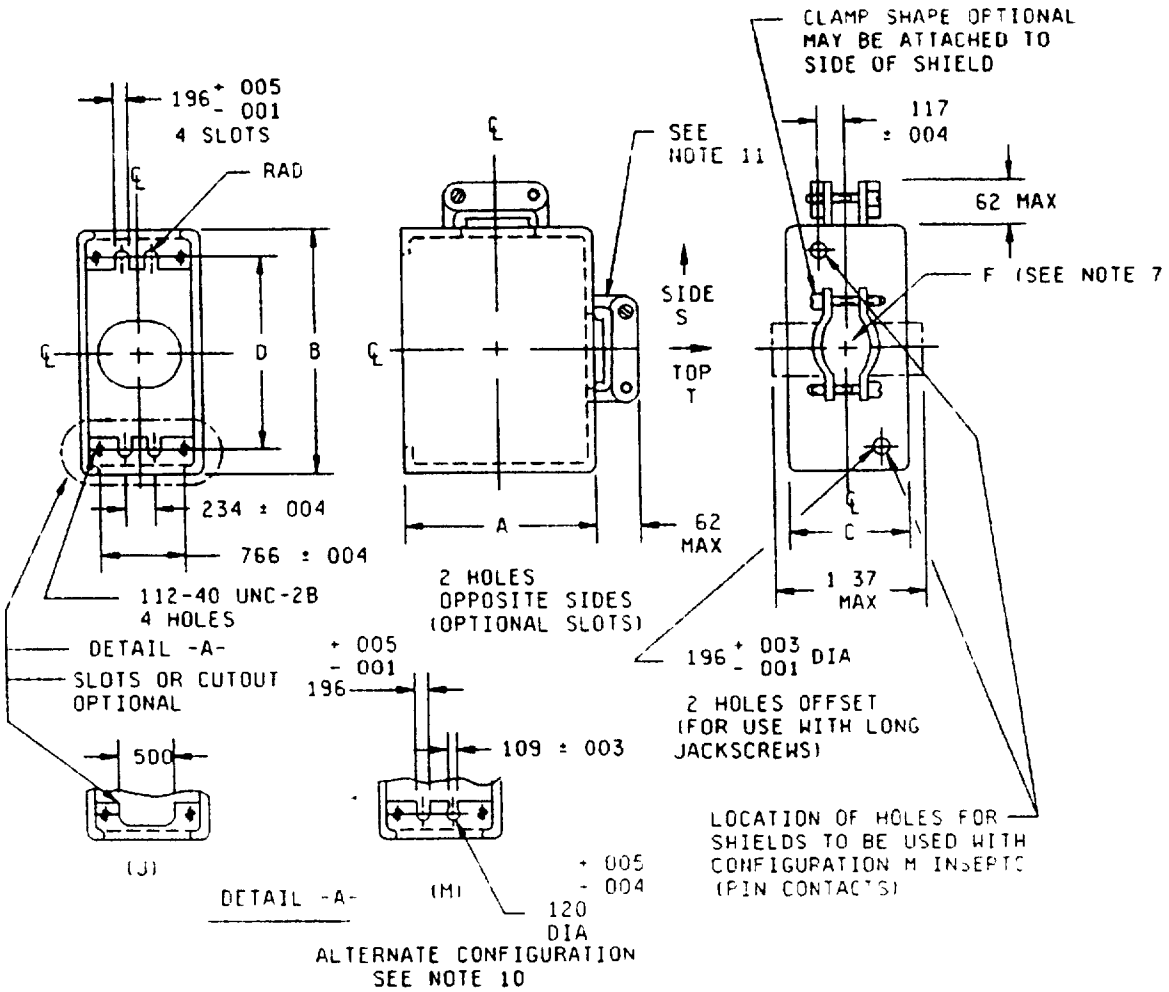

For use with insert configurations J (3) and M (4)

Shield

Configuration A

FIGURE 6 Shield configurations - Continued

Insert designator 1/ 2/ 3/	Configuration and cable opening	Connector size	A max min	B ± 016 (41)	C ± 016 (41)	D ± 010 (25)	F min cable opening
A (R)	1 or 2	7	1 35 (34 3) 1 18 (30 0)	1.220 (30 99)	437 (11 09)	906 (23 01)	18 (4.6)
B (S)	1 or 2	9	1 35 (34 3) 1 18 (30.0)	1 312 (12.70)	437 (11 09)	1 000 (25 40)	10 (2 5)
C (T)	1 or 2	14	1 35 (34 3) 1 18 (30 0)	1 250 (31 75)	500 (12 70)	938 (23 82)	.19 (4 8)
D (U)	1 or 2	20	1.35 (34.3) 1 18 (30.0)	1 562 (39 67)	500 (12 70)	1 250 (31 75)	22 (55 9)
E (V)	1 or 2	26	1 35 (34 3) 1.18 (30 0)	1 625 (41.27)	640 (16 25)	1 312 (33 32)	22 (55 9)
F (W) or Q (X)	1 or 2	34	1 35 (34 3) 1 22 (31 0)	2 000 (50 80)	828 (21 03)	1 688 (42 87)	34 (8 6)
G (Y) or P (Z)	1 or 2	42	1 35 (34 3) 1 22 (31 0)	2 312 (58 72)	828 (21 03)	2 000 (50 80)	34 (8 6)
H (1) or N (2)	1 or 2	50	1 35 (34 3) 1 22 (31 0)	2 312 (58 72)	828 (21 03)	2 282 (57 96)	34 (8 6
J (3)	1 or 2	75	1 35 (34 3) 1 22 (31 0)	2 594 (65 88)	1 188 (30 17)	2 282 (57 96)	55 (14 0)
M (4)	1 or 2	75	1 35 (34 3) 1 22 (31 0)	2 594 (65 88)	1 188 (30 17)	2 282 (57 96)	55 (14 0)

1/ Used when shell is specified

2/ Insert designators L (6), M (4), N (2), P (Z), and Q (X) use with one piece jackscrews

3/ Insert designators for piece part orders are in parentheses

FIGURE 6 Shield configurations - Continued

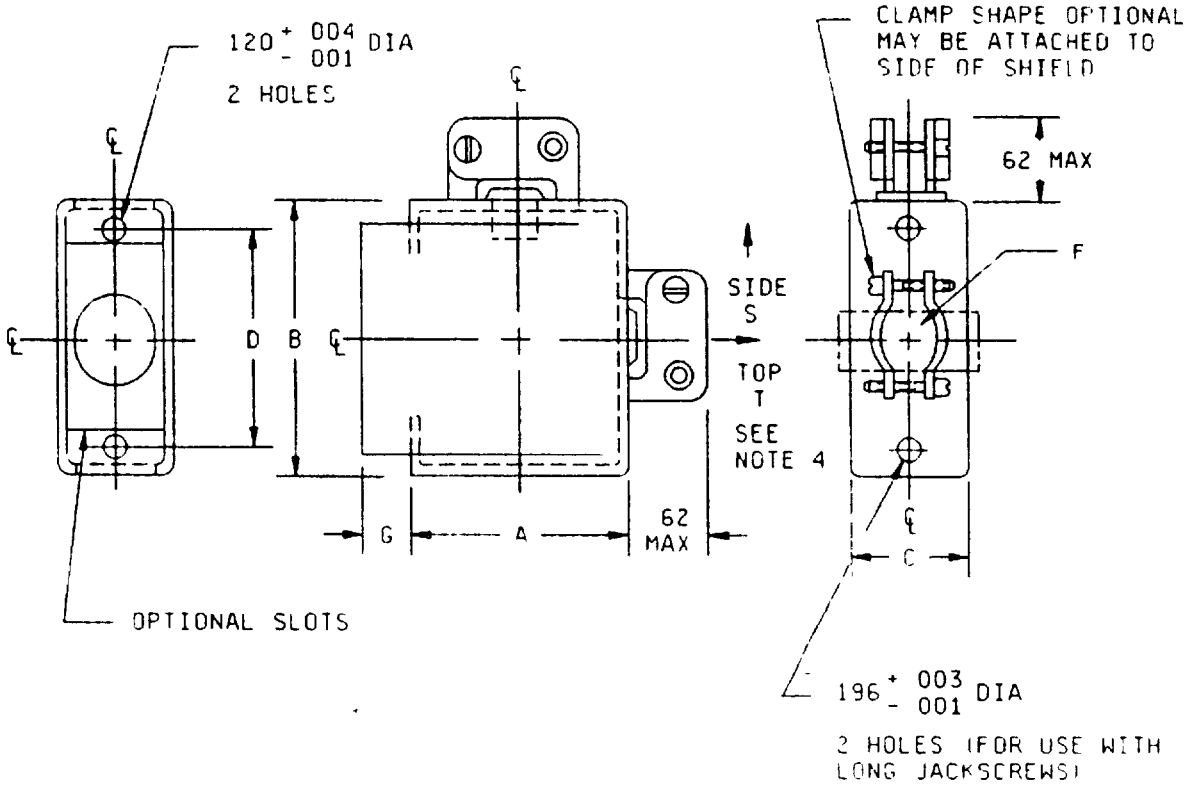

For use with insert configurations A (R), B (S), C (T), D (U), and E (V)

Shield

Configuration B

FIGURE 6 Shield configurations - Continued

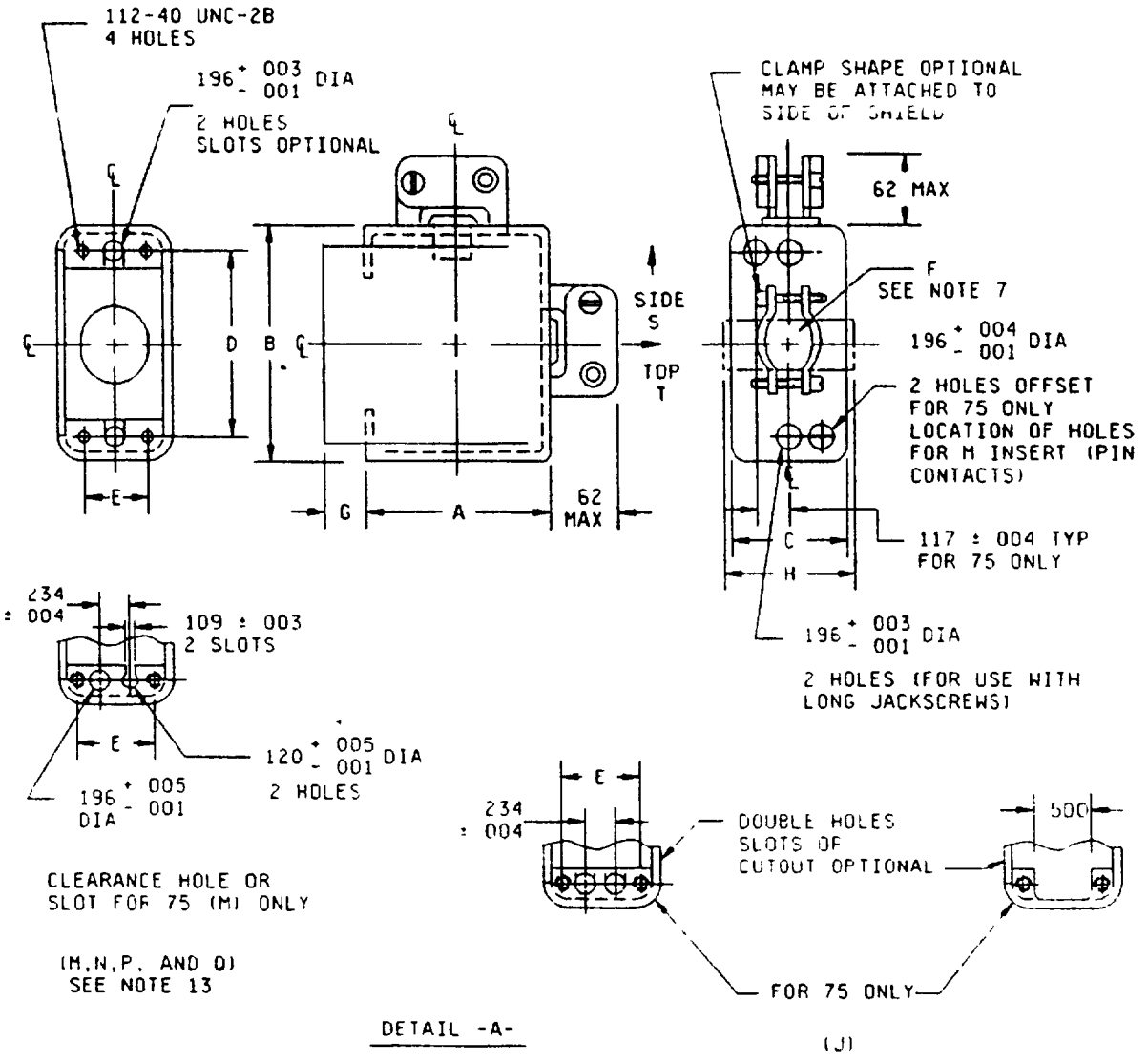

For use with insert configurations F (W), G (Y), H (1), J (3), M (4), N (2), P (Z), and Q (X)

Shield

Configuration B

FIGURE 6 Shield configurations - Continued

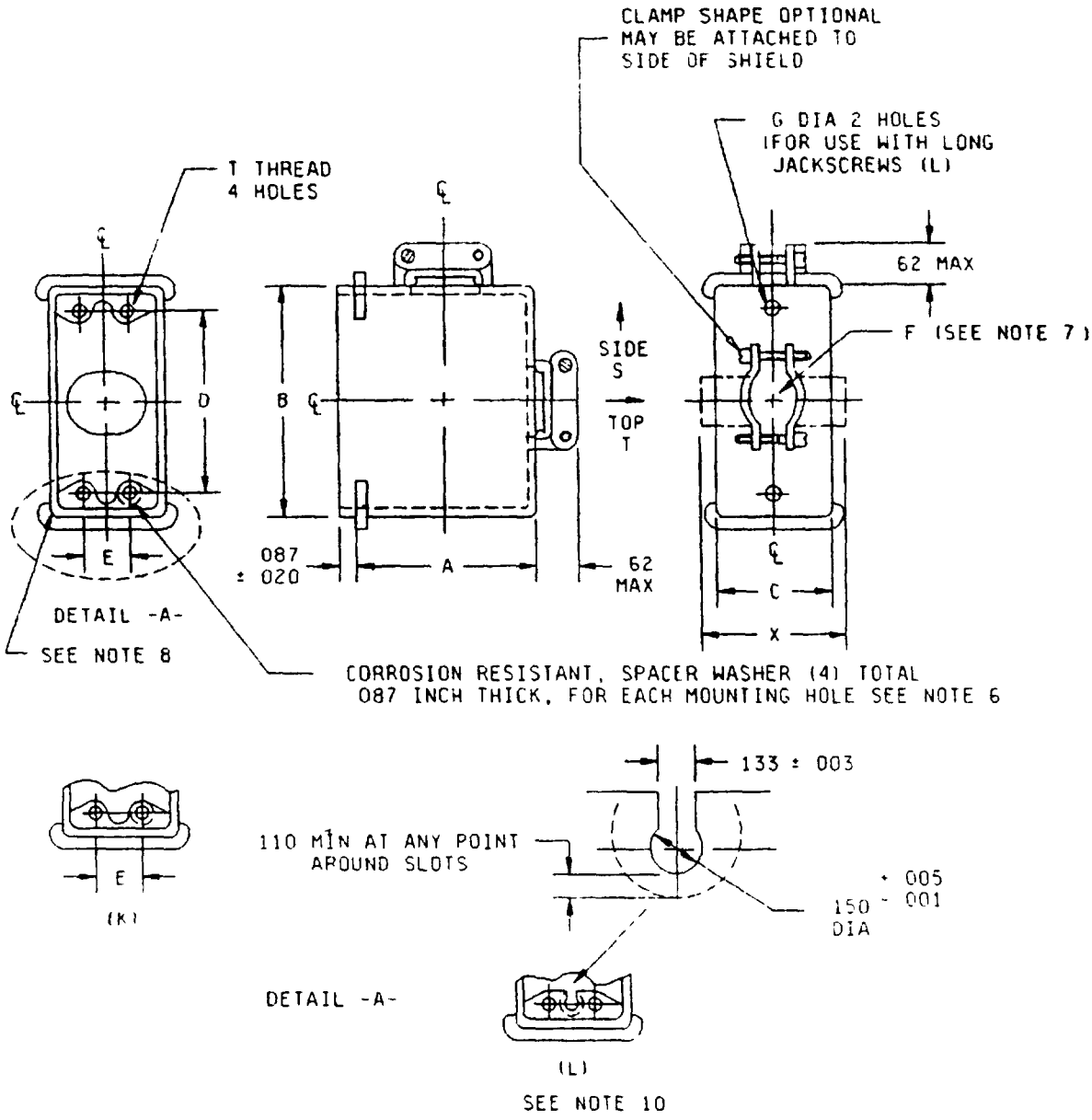

For use with insert configurations K (5) and L (6)

Shield

Configuration B

FIGURE 6 Shield configurations - Continued

DETAIL A

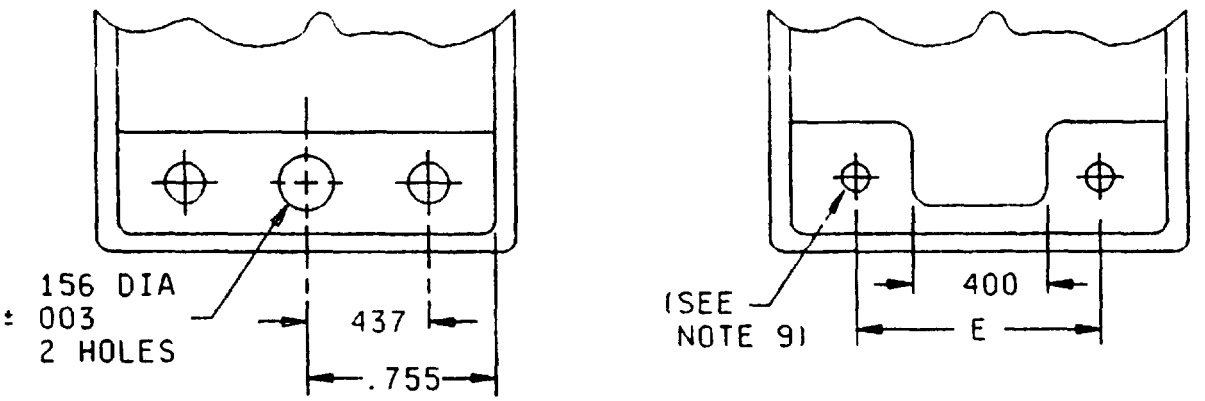

Alternate configurations K (5) and L (6)

For use with insert configurations K (5) and L (6)

Shield

Configuration E

FIGURE 6 Shield configurations - Continued

Insert designator 1/ 2/	Configuration and cable opening	Connector size	A max min	B ± 016 (0 41)	C ± 016 (0 41)	D ± 005 (0 13)	F min cable opening	G ± 047 (1 19)
A (R) 3/	3 or 4	7	1.35 (34 3) 1 18 (30 0)	1.218 (32 51)	437 (11 10)	906 (23 01)	0 07 (1 8)	0 265 (6 73)
B (S) 3/	3 or 4	9	1 35 (34 3) 1 18 (30.0)	1 312 (33 32)	437 (11 10)	1 000 (25 40)	0 16 (4 1)	0 265 (6 73)
C (T) 3/	3 or 4	14	1 35 (34 3) 1 18 (30 0)	1.250 (31.75)	.500 (12 70)	937 (23 80)	019 (4 82)	0 265 (6 73)
D (U) 3/	3 or 4	20	1.35 (34.3) 1.18 (30 0)	1 562 (39 67)	500 (12 70)	1 250 (31 75)	22 (5 6)	0 265 (6 73)
E (V) 3/	3 or 4	26	1 35 (34 3) 1 18 (30 0)	1 625 (41.28)	634 (16 10)	1 312 (33 32)	0 26 (6 6)	0 265 (6 73)
F (W) 3/	3 or 4	34	1 35 (34 3) 1 22 (31 0)	2 000 (50 80)	828 (21 03)	1 688 (42 88)	0 34 (8 6)	0 265 (6 73)
G (Y) 3/	3 or 4	42	1 35 (34 3) 1 22 (31 0)	2 312 (58 92)	828 (21 03)	2 000 (50 80)	0 34 (8 6)	0 093 (2 362)
H (1) 3/	3 or 4	50	1 35 (34 3) 1 22 (31 0)	2 594 (65 89)	828 (21 03)	2 282 (57 96)	0 34 (8 6)	093 (2 36)
J (3) 3/	3 or 4	75	1 35 (34 3) 1 22 (31 0)	2 594 (65 89)	1 188 (30 18)	2 282 (57 96)	0 55 (14 0)	0 93 (2 4)
K (5) 3/ 4/ 5/	3 or 4	104	2 26 (57 4) 2 20 (55 9)	2 835 (72.01)	1 625 (41 28)	2 375 (60 33) 6/	1 10 (2 8)	0 229 (5 81)
L (G) 3/ 4/ 6/	3 or 4	104	2 26 (57 4) 2 20 (55 9)	2 835 (72 01)	1 625 (41 28)	2 375 (60 33) 6/	1 10 (2 8)	0 229 (5 81)

Shield

Configuration B

FIGURE 6 Shield configurations - Continued

Insert designator 1/ 2/	Configuration and cable opening	Connector size	A max min	B ± 016 (0 41)	C ± 016 (0 41)	D ± 005 (0.13)	E ± 005 (0 13)	F min cable opening	G ± 047 (1 19)	H max
Q (X) 7/	3 or 4	34	1 35 (34 3) 1.22 (31 0)	2 000 (50 80)	828 (21 03)	1 688 (42.87)	468 (11 88)	34 (8.6)	265 (6.73)	1 13 (28 7)
P (2) 7/	3 or 4	42	1.35 (34 3) 1.22 (31 0)	2.312 (58 72)	828 (21.03)	2 000 (50 80)	468 (11 88)	34 (8 6)	093 (2.36)	1 13 (28 7)
N (2) 7/	3 or 4	50	1.35 (34 3) 1.22 (31 0)	2 594 (65 88)	828 (21 03)	2.282 (57 96)	468 (11 88)	34 (8.6)	093 (2 36)	1 13 (28 7)
M (4) 7/	3 or 4	75	1 35 (34 3) 1 22 (31 0)	2 594 (65 88)	1 188 (30 17)	2.282 (57 96)	766 (19 45)	766 (19 45)	093 (2 36)	1 37 (34 8)

Insert designators for piece parts are in parentheses

2/ Tolerance is ± 010 inch (0 25 mm), unless otherwise specified

3/ For use when no shell is specified

4/ For use with or without shells

5/ 1 thread 138-32 UNC-2B X max 1 88

6/ 1 thread 138-40 UNC 2B X max 1 88

7/ Use with one-piece jackscrews and are not used with shells

Shield

Termination

FIGURE 6 Shield configurations - Continued

Inches	mm	Inches	mm	Inches	mm	Inches	mm
.001	0.03	133	3 38	550	13 97	1.250	31 75
003	0 08	138	3 51	620	15 75	1 312	32 42
004	0 10	150	3.81	755	19 17	1.350	34.29
005	0 13	160	4 06	766	19 45	1 370	34 79
.010	0 25	190	4 83	828	21 03	1 562	39 67
016	0 41	196	4 98	875	22 23	1 625	41 28
020	0 51	220	5 59	890	22 61	1 660	42 16
030	0 76	226	6 60	906	23 01	1 688	42 88
.047	1 19	229	5 81	937	23 80	1 969	50 01
062	1.57	234	5.94	1 000	25 40	2 000	50 80
070	1 78	260	6 60	1 100	27 94	2 230	56 66
087	2.21	265	6.73	1.110	28 19	2 282	57 97
093	2 36	340	8 63	1 130	28 70	2 312	58 72
109	2 77	400	10 16	1.170	29 72	2 366	60 10
110	2 79	437	11 09	1 180	29 97	2 375	60 33
112	2 84	460	11 70	1 211	30 76	2 594	65 89
117	2 97	468	11 89	1 218	30 94	2 835	72 01
120	3 05	500	12 70	1 220	30 98		

NOTES

1 Dimensions are in inches
2 Unless otherwise specified, tolerance is ± 016 (0 41 mm)
3 Metric equivalents are in parentheses and are given for general information only
4 Material Aluminum alloy in accordance with QQ-A-250/8, temper H32, 040 inch (0 41 mm)
5 Finish Anodized in accordance with MIL-A-8625, type I or type II
6 Spacer washers (4), are used only with shell, discard in other uses Aluminum shall be in accordance with QQ-A-250/11, T6, anodized in accordance with MIL-A-8625, type I or type II
7 Edges of cable entry hole to be rounded to prevent insulation chafing
8 No cracks, chips, or sharp edges on all 4 edges of flange
9 Number 6-32 UNC-2B swedge and thread 4 holes
10 For use with one-piece jackscrews
11 Clamp hinge may attach to side of shield
12 Contact type and jack screw orientation must be separated to guarantee intermateability
13 Shield configuration B, insert designators M, N, P, and Q are for use with one-piece jackscrews and are not used with shell

FIGURE 6 Shield configurations - Continued

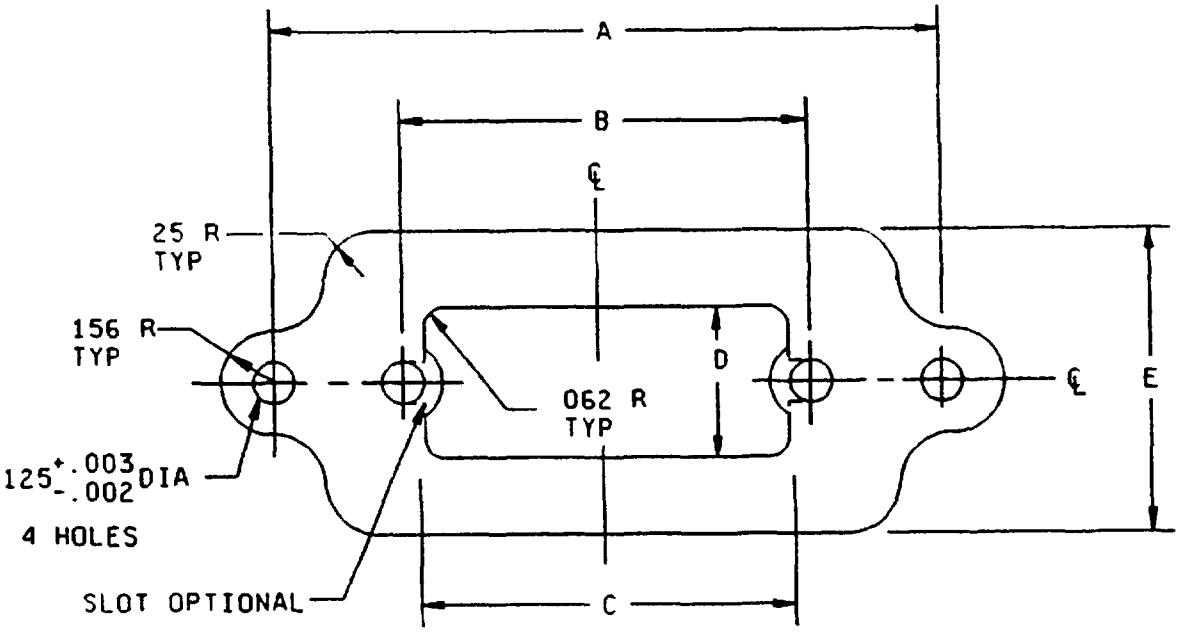

Retaining plate designator	Connector size (number of contacts)	A ± 005 (0.13)	B ± 005 (0 13)	C	D	E
A	9	2 016 (51.20)	1 000 (25 40)	875 (22.22)	406 (10 31)	953 (24 20)
B	14	1 953 (49.60)	937 (23 79)	812 (20.62)	469 (11.91)	1 016 (25 80)
C	20	2.266 (57 55)	1 250 (31.75)	1 125 (28.57)	469 (11.91)	1 016 (25 80)
D	26	2.328 (59.13)	1 312 (33.32)	1 187 (30 14)	593 (15.06)	1 141 (28 98)

Retaining plate

Configuration A

FIGURE 7 Shield retaining plate configurations

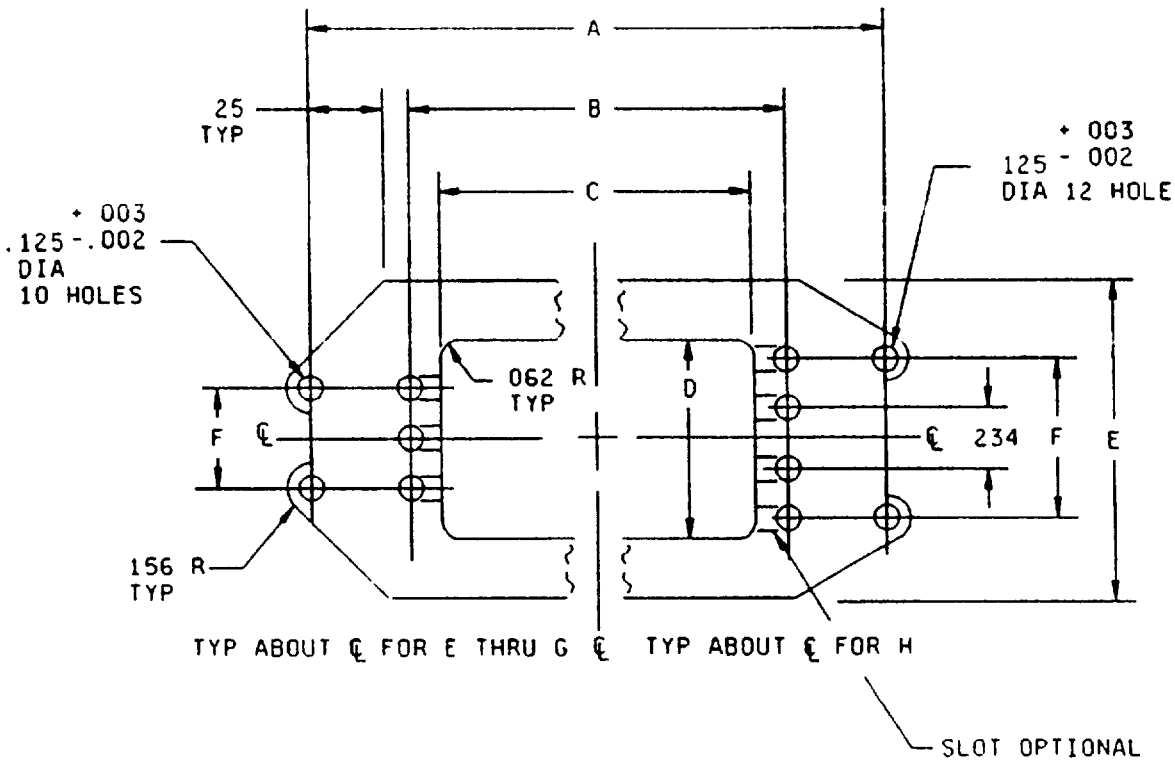

Retainer plate designator	Connector size (number of contacts)	A ± 005 (0 13)	B ± 005 (0 13)	C	D	E	F ± 005 (0 13)
F	34	2 703 (68 65)	1 687 (42 84)	1 438 (36 52)	750 (19 05)	1 328 (33 73)	468 (11 88)
G	42	3 016 (76 60)	2 000 (50 80)	1 750 (44 45)	750 (19 05)	1 328 (33 73)	468 (11 88)
H	50	3 422 (86 91)	2 281 (57 93)	2 031 (51 58)	750 (19 05)	1 453 (36 90)	468 (11 88)
J	75	3 422 (86 91)	2 281 (57 93)	2 031 (51.58)	1 109 (28 16)	1 797 (45 64)	766 (19 45)

Retaining plate

Configuration B

FIGURE 7. Size 3 retaining plate configurations - Continued

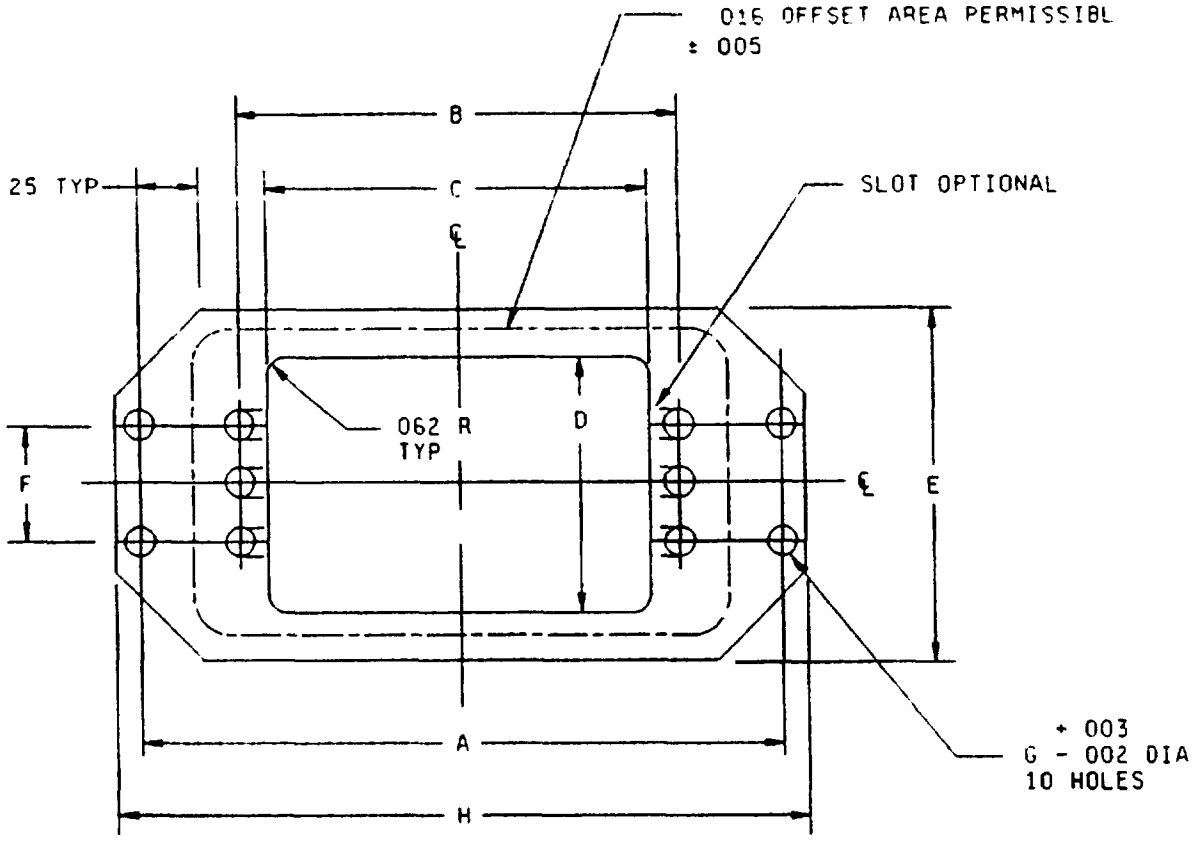

Retainer plate designator	Connector size (number of contacts)	A ± 005 (0.13	B ± 005 (0 13)	C	D	E	F ± 005 (0 13)	G	H
K	104	3 500 (88 90)	2 375 (60 32)	2 125 (53 97)	1 486 (37 74)	2 000 (50 80)	875 (22 25)	10 150 (3 81)	3 875 (98 42)

Retaining plate

Configuration C

FIGURE 7 Shield retaining plate configurations - Continued

Inches	mm	Inches	mm	Inches	mm	Inches	mm
002	0 05	.750	19 05	1.328	33 73	2 281	57 94
003	0 08	766	19 46	1 438	36 53	2 328	59 13
005	0 13	812	20 62	1 453	36 91	2 375	60 33
016	0 41	875	22 23	1 486	37 74	2 703	68 66
062	1 57	937	23 80	1 687	42 85	2 984	75 79
125	1 57	953	24 21	1 688	42 88	3 106	78 89
150	3 81	1 000	25 40	1 718	43 64	3 296	83 72
156	3 96	1 016	25 81	1 750	44 45	3 422	86 92
234	5 94	1 109	28 17	1 953	49 61	3 500	83 90
250	6 35	1 125	28 58	2 000	50 80	3 875	98 43
406	10 31	1 141	28 98	2 016	51 21		
468	11 89	1 187	30 15	2 031	51 60		
500	17 70	1 250	31 75	2 125	53 98		
593	15 06	1 312	33 32	2 266	57 56		

NOTES

1. Dimensions are in inches
2. Metric equivalents are given for general information only
3. Unless otherwise specified, tolerance is ± 016 (0 41 mm)
4. Material Aluminum alloy in accordance with QQ-A-250/8, temper H-32, 040 inch (1 02 mm) thick
5. Finish Anodize in accordance with MIL A-8625, type I or type II

FIGURE 7 Shield retaining plate configurations - Continued

REQUIREMENTS

Dimensions and configuration See figures 1, 2, 3, 4, 5, 6, 7

Mating connector See MIL-C-28748/3 and MIL-C-28756/5

Nuts As specified on guide pin configuration B. Not required with shield

Depth of insertion for resistance to probe damage test 203 ± 015 inch (5.15 ± 0 38 mm)

Part number As shown in the following example 1/

(See part number code)

M28748/6	A	C	1	H	L	1A
Basic number of specification sheet	Shell hardware 2/ designator (see figure 4 for configuration styles)	Insert designator (see figure 2)	Shield and shield clamp location or retaining plate (see figures 6 and 7)	Shell type and 3/ polarization (see figure 5)	Jackscrews or guidepins (see figure 1)	Contacts 4/

PART NUMBER CODE

Shell hardware 2/ designators	Insert designators	Number of contacts positions
A- long jackscrew hardware only	A	7
	B	9
B- all other hardware	C	14
	D	20
-- (insert only)	E	26
	F	34
	G	42
	H	50
	J	75
	K	104
	0 - No insert included	

Insert 7/ Designators through hole	
Q	34
P	42
N	50
M	75
L	104

Insert 8/ designators for piece part orders	
R	7
S	9
T	14
U	20
V	26
W	34
[illegible]	42
[illegible]	50
[illegible]	75
[illegible]	104

Shield and 5/6/ shield clamp location or retaining plate	
1--top opening	
2--side opening	
3--top opening	
4--side opening	
A--	
B	-Retaining plate
C	
D	
E	
F	
C	
H	
J	
K--	
0--none included	

Through hole 7/ 8/ Insert designators for piece part orders
|
|
|
|
|
X
Z
Z
4
6

Shell type and polarization designators		Polarization positions 3/
A--		A
B	-Receptacle shells	B
C		C
D		D
E		E
F		F
G--		G
H---Unpolarized		H
J--		A
K	-Plug shells	B
L		C
M		D
N		E
P		F
Q--		G
R--Unpolarized		H
0--No shell included		

Contacts	Per MIL-C-28748
1A - 100 percent size 20	
1L - None included	

Jackscrews
or
guidepins
M - long jackscrews, multipiece construction, configuration E, figure 1
L - long jackscrews, one piece construction, configuration F, figure 1
S - short jackscrews, configuration D figure 1 (not used with shield)
F - fixed jackscrews, configuration L, figure 1 (not used with shield)
G - guidepins, configuration B Figure 1
0 - none included 1/

Jack and guide location The male jackscrew (turning or fixed) or male guidepin shall be located by the "A" or "1" socket contact

1/ The number zero (0) is used to indicate which parts are not included

2/ Not applicable to size 7 insert designator A

3/ Polarization positions are for location of plug and receptacle shell pins and slots (see figure 4)

4/ Contacts In accordance with MIL-C-28748, 1A - 100 percent size 20 To order without contacts use the designator, 1L

5/ Screws MS35275-215 furnished with shield configurations, insert designators when required MS35275-229 furnished with shield configurations, insert designators when required Cross drilled hole is optional

6/ Shield configuration A is 1 and 2, and shield configuration B is 3 and 4

7/ Through hole insert configurations are used with long jackscrews only

8/ These designators are informational and used for insert reference (connector size) to order an appropriate shield or shell as a piece part

TABLE I Superseded specification and MS sheets

Specification or MS sheet	Dated
MIL-C-28748/6	30 November 1981
MS18192	1 June 1983
MS18193	14 November 1988
MS18194	11 April 1974
MS18195	20 may 1970
MS18196	23 June 1972
MS18197	23 June 1972
MS18198	23 June 1972
MS18199	23 June 1972
MS18200	20 May 1970
MS18203	26 April 1990
MS18204	20 December 1965
MS18256	23 June 1972
MS18259	23 June 1972
MS18260	23 June 1972
MS18262	23 June 1972
MS24003	23 June 1972
MS24009	23 June 1972
MS24013	23 June 1972
MS24019	23 June 1972
MS24021	23 June 1972
MS24025	23 June 1972
MS24132	1 June 1976
MS24133	3 January 1979

Revision letters are not used due to the extensiveness of the changes

CONCLUDING MATERIAL

Custodians
Army - CR
Navy - EC
Air Force - 85

Review activities
Army - AT, MI
Navy - AS
Air Force - 11, 17, 99
DLA - ES

User activities
Army - AV, ME, AR
Navy - MC, OS, SH

Preparing activity
Navy - EC

Agent
DLA - ES

(Project 5935-3874-02)