MILITARY SPECIFICATION SHEET

© DISPLAY, OPTOELECTRONIC, INDICATOR, DIGITAL, INCANDESCENT (STYLE I), SEGMENTED, DOT PATTERN AND BAR PATTERN, RFI SHIELDED, MOISTURE SEALED, TYPE R03

This specification is approved for use by all Departments and Agencies of the Department of Defense.

© The requirements for acquiring the product described herein shall consist of this specification sheet and the issue of the following specification listed in that issue of the Department of Defense Index of Specifications and Standards (DODISS) specified in the solicitation: MIL-D-28803.

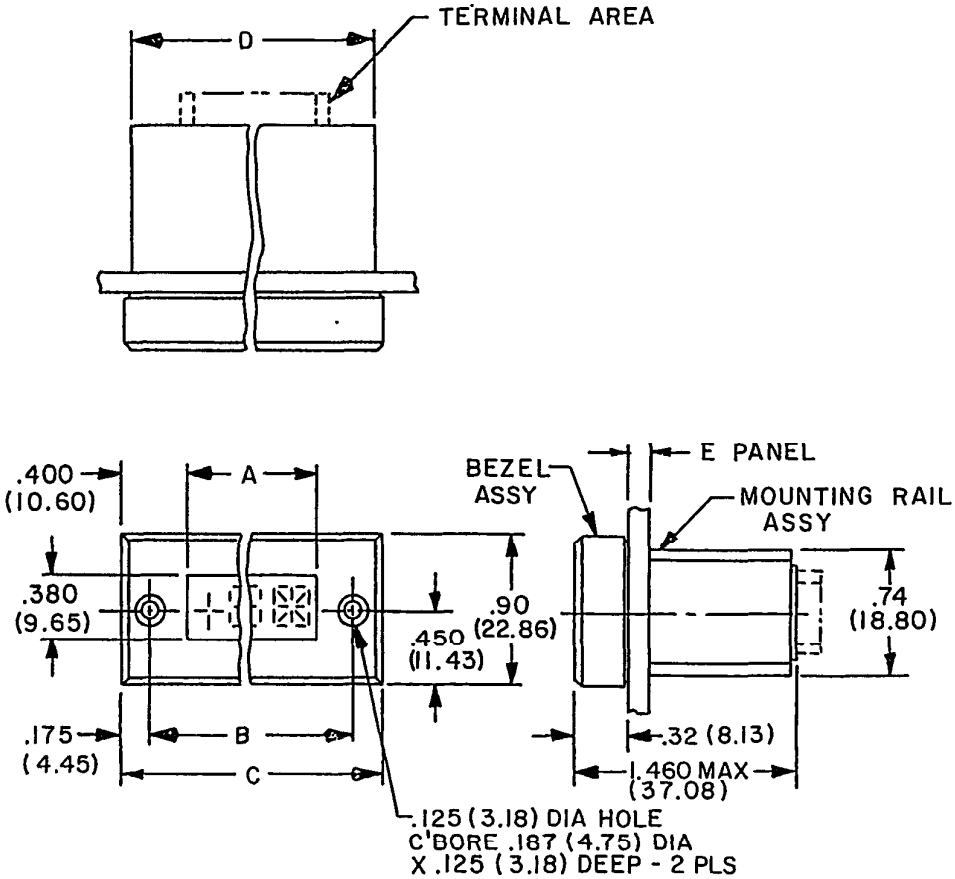

© FIGURE 1. Type R03 display.

© denotes changes

DISTRIBUTION STATEMENT A. Approved for public release; distribution is unlimited.

Dimension	Calculation
A	L + .10 (2.54)
B	L + .55 (13.97)
C	L + .90 (22.86)
D	L + .80 (20.32)
E	.093, .063, .125, .190, or .250 (See figure 3, and table I)
Type of module	Calculation for L
16 segment	Multiply the number of 16 segment x .40 (10.16)
7 segment	Multiply the number of 7 segment x .20 (5.08)
4 segment	Multiply the number of 4 segment x .20 (5.08)
Colon	Multiply the number of colons x .20 (5.08)
9 segment	Multiply the number of 9 segment x .40 (10.16)
North/South East/West	Multiply the number of N/S or E/W x .40 (10.16)

NOTES:
1. Dimensions are in inches.
2. Millimeters are in parentheses.
3. Metric equivalents are given for general information only.
4. Unless otherwise specified, tolerances are ±.010 (0.25 mm) for three place decimals and ±.02 (0.5 mm) for two place decimals.
5. Design configuration optional with envelope as shown.

FIGURE 1. Type R03 display - Continued.

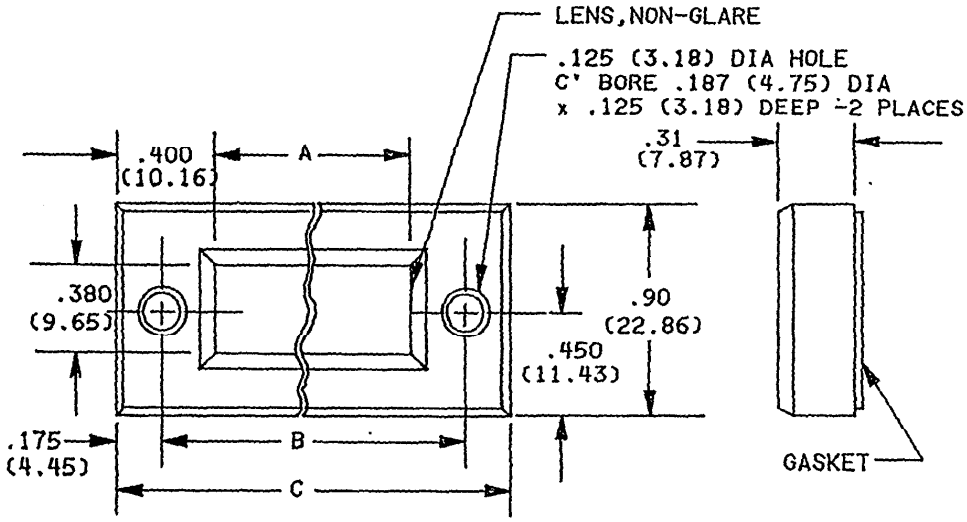

FIGURE 2. Bezel assembly.

Dimension	Calculation
A	L + .10 (2.54)
B	L + .55 (13.97)
C	L + .90 (22.86)

Type of module	Calculation for L
16 segment	Multiply the number of 16 segment x .40 (10.16)
7 segment	Multiply the number of 7 segment x .20 (5.08)
4 segment	Multiply the number of 4 segment x .20 (5.08)
Colon	Multiply the number of colons x .20 (5.08)
9 segment	Multiply the number of 9 segment x .40 (10.16)
North/South East/West	Multiply the number of N/S or E/W x .40 (10.16)

NOTES:
1. Dimensions are in inches.
2. Millimeters are in parentheses.
3. Metric equivalents are given for general information only.
4. Unless otherwise specified, tolerances are ±.010 (0.25 mm) for three place decimals and ±.02 (0.5 mm) for two place decimals.
5. Design configuration optional with envelope as shown.

FIGURE 2. Bezel assembly - Continued.

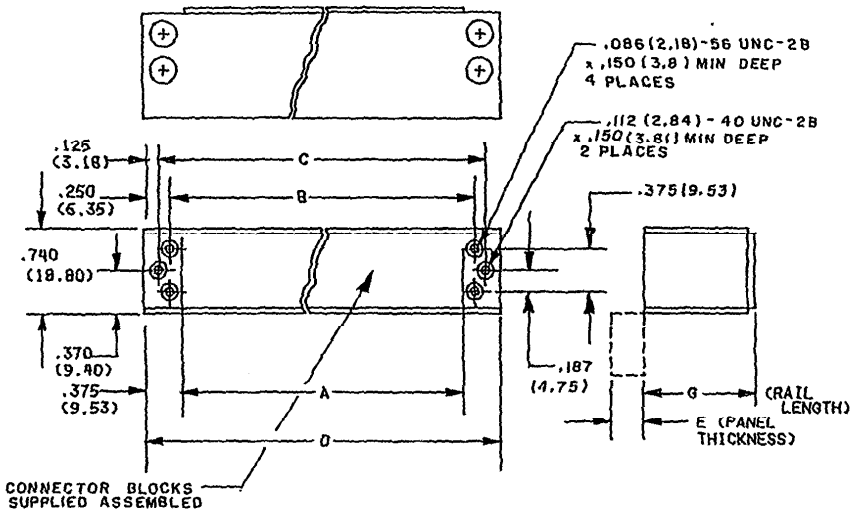

Dimension	Calculation
A	L + .05 (1.3)
B	L + .30 (7.6)
C	L + .55 (14.0)
D	L + .80 (20.3)

Dimension E		Dimension G	
Inches	mm	Inches	mm
.063	1.60	1.05	26.7
.093	2.36	1.02	25.9
.125	3.18	.99	25.1
.190	4.83	.92	23.4
.250	6.35	.86	21.8

FIGURE 3. Mounting rail assembly.

Type of module	Calculation for L
16 segment	Multiply the number of 16 segment x .40 (10.16)
7 segment	Multiply the number of 7 segment x .20 (5.08)
4 segment	Multiply the number of 4 segment x .20 (5.08)
9 segment	Multiply the number of 9 segment x .40 (10.16)
North/South East/West	Multiply the number of N/S or E/W x .40 (10.16)

NOTES:
1. Dimensions are in inches.
2. Millimeters are in parentheses.
3. Metric equivalents are given for general information only.
4. Unless otherwise specified, tolerances are ±.010 (0.25 mm) for three place decimals and ±.02 (0.5 mm) for two place decimals.
5. Design configuration optional with envelope as shown.

FIGURE 3. Mounting rail assembly - Continued.

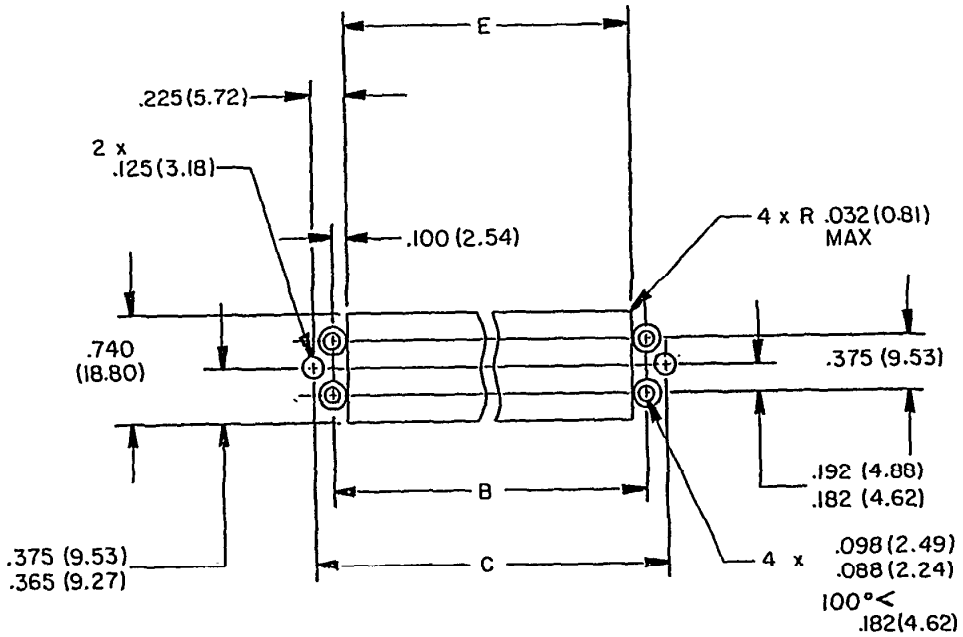

Dimension	Calculation
E	L + .100 (5.24)
B	L + .300 (7.62)
C	L + .550 (13.97)

FIGURE 4. Panel cut-out dimensions.

REQUIREMENTS:

Design and construction:

Dimensions and configuration: See figure 1 through figure 4 and table I through table IV.

© Complete multistation display assembly shall be assembled and shall consist of:

a. Bezel assembly with lens and panel gasket.

b. Mounting rail assembly.

c. M28803/4 readout modules.

d. Lamp assemblies M28803/4.

e. Connector blocks M28803/4.

f. Insertable crimp-type terminals (packaged separately) M28803/4.

RFI shielding: Grounded RFI panel gasket shall be provided.

Mounting flange: Front face of mounting flange shall be a black lusterless color.

Weight:

Bezel assembly: For dimension L = .20 inch, 11.0 grams maximum. Add .10 gram for each additional .20 inch increment.

Mounting rail assembly: For dimension L = .20 inch, 26.0 grams maximum. Add .60 gram for each additional .20 inch increment.

© All other components: See MIL-D-28803/4.

Light source: T-3/4 incandescent.

Front lens: Display shall appear obscured in the unlighted condition. In the lighted condition characters shall appear incandescent white. See table III.

Lens material: Neutral density filter (nonglare).

Color: See table III.

Storage temperature: -55°C to +85°C.

© Operating temperature: -55°C to +71°C.

Vibration grade: 2.

Shock: Method I.

Terminal strength: 5 pounds, test condition A.

Solderability: Not applicable.

Chromaticity: Method I.

Luminance: Average 300-foot-lamberts minimum with a supply voltage of 5 volts.

Dot-to-dot ratio:

Segment to segment: 3:1 maximum.

Digit to digit: 3:1 maximum.

Contrast ratio: 10 to 1 minimum.

Mechanical endurance: Not applicable.

Electrical:

Supply voltage: 5 volts maximum.

Supply current: (Each lamp) .025 ampere maximum.

TABLE I. Code letters for type of display (dot matrix or bar matrix) and panel thickness.

Code	Type of display	Panel thickness
1	Dot matrix	.250 (6.35)
2	Dot matrix	.190 (4.83)
3	Dot matrix	.125 (3.18)
4	Dot matrix	.063 (1.60)
5	Dot matrix	.093 (2.36)
6	Bar matrix	.250 (6.35)
7	Bar matrix	.190 (4.83)
8	Bar matrix	.125 (3.18)
9	Bar matrix	.063 (1.60)
0	Bar matrix	.093 (2.36)

© TABLE II. Code letters for combination, type and arrangements of MIL-D-28803/4 module assemblies.

Code letter	Display	Type of module
A	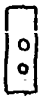	Colon, degree or decimal
B		16 segment alpha numeric
C	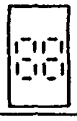	2 - 7 segment numeric

© TABLE II. Code letters for combination, type and arrangements of MIL-D-28803/4 module assemblies - Continued

Code letter	Display	Type of module
D		4 segment sign and 7 segment numeric
E		Colon and 7 segment numeric
F		7 segment numeric and colon
G		3 - 7 segment numeric
H		1 - 4 segment and 2 - 7 segment numeric
J		Colon and 2 - 7 segment numeric
K		7 segment, colon and 7 segment numeric
L		2 - 7 segment, numeric and colon
M		1 - 9 segment alpha numeric
T	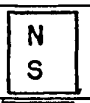	North-South
U		East-West
V		2 - 7 segment with decimal
W		2 - 7 segment with 2 decimals

TABLE III. Illuminated chromaticity limits.

Color	@ 2100° Kelvin	
	X	Y
Incandescent white 1/	.500	.400
	.500	.450
	.550	.400
	.550	.450

1/ Unfiltered incandescent light.

QUALIFICATION:

Extent of qualification: See table IV.

TABLE IV. Extent of qualification.

PIN	Number of samples required	Tests	Extent of approval
M28803/3-2LC	2	Complete in accordance with qualification inspection of MIL-D-28803	All
M28803/3-7LC	2		
M28803/3-2CG	2		
M28803/3-7CG	2		
M28803/3-2DCEFB	1		
M28803/3-7DCEFB	1.		

Part or Identifying Number (PIN): The PIN shall consist of the letter "M" followed by the basic number of the specification sheet and a coded symbol indicating the number, type and arrangement of the modules.

M28803/3 - 8 DLLBB

Military designator and specification sheet number.

Single code indicating display type (dot matrix or bar matrix) and panel thickness (see table I).

Code indicating number, type and arrangement of modules (see table II). The sequence of the code letters for the modules is written in order of viewing from left to right. (See examples).

Example:

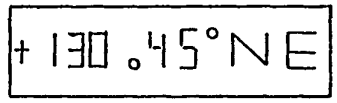

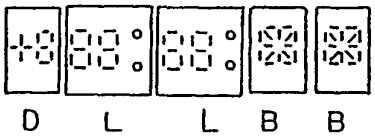

.125 panel, +130.45° NE
M28803/3-8DLLBB
(bar matrix segments)

Example:

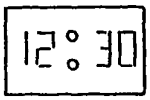

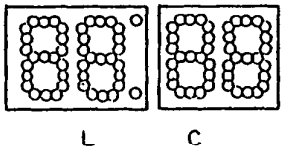

.250 panel, 12:30
M28803/3-1LC
(dot matrix segments)

CONCLUDING MATERIAL

Custodians:
Army - ER
Navy - EC
Air Force - 85

Review activities:
Navy - AS
Air Force - 11, 17, 99
DLA - ES

User activities:
Army - AR, AT, AV, ME, MI
Navy - MC, OS, SH

Preparing activity:
Navy - EC

Agent:
DLA - ES

(Project 5980-0004-3)