INCH-POUND

MIL-C-28804/11D
12 April 1991
SUPERSEDING
MIL-C-28804/11C
21 July 1986

MILITARY SPECIFICATION SHEET

(D) CONNECTORS, PLUG, ELECTRIC, RECTANGULAR, HIGH DENSITY, POLARIZED CENTER JACKSCREW, INTERFACIAL SEAL, SOLDER PIN CONTACTS, CLASS SE

This specification is approved for use by all Departments and Agencies of the Department of Defense.

(D) The requirements for acquiring the product described herein shall consist of this specification sheet and the issue of the following specification listed in that issue of the Department of Defense Index of Specifications and Standards (DODISS) specified in the solicitation: MIL-C-28804.

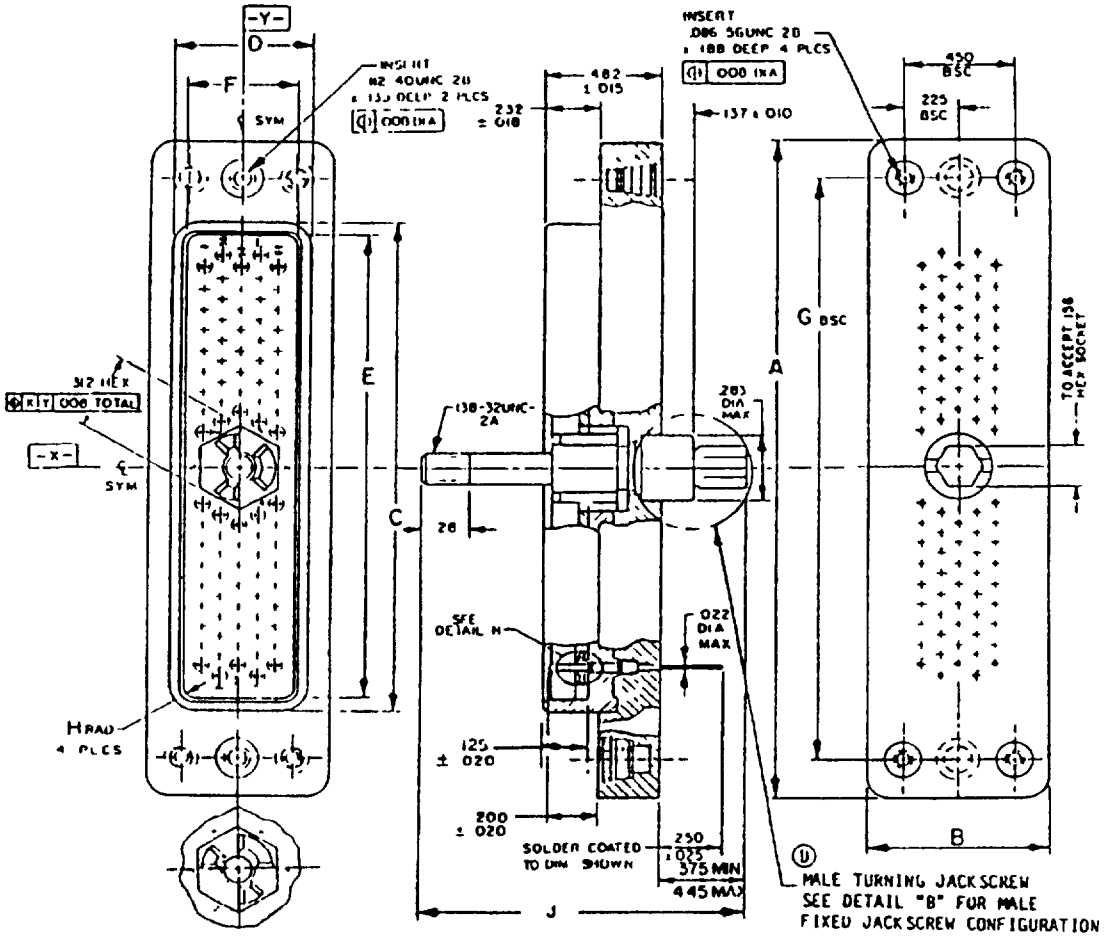

FIGURE 1. Connector, pin contacts, class SE.

(D) denotes changes.

DISTRIBUTION STATEMENT A. Approved for public release, distribution is unlimited.

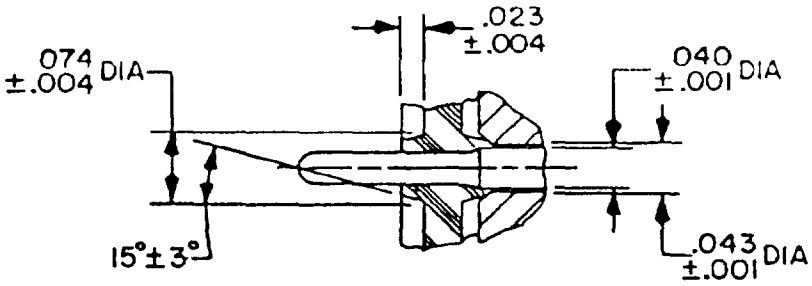

DETAIL A

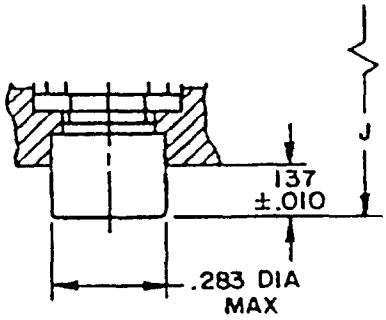

MALE FIXED JACKSCREW

(D) DETAIL B

Inches	mm	Inches	mm
.001	0.03	.135	3.43
.004	0.10	137	3 48
.008	0.20	.138	3.51
.010	0.25	.156	3.96
.015	0.38	.188	4.78
.018	0.46	.200	5.08
.020	0.51	.225	5.72
.022	0.56	.232	5.89
.023	0.58	.250	6.35
.025	0.64	.283	7.19
.040	1.02	.312	7.92
.043	1.09	.375	9.52
.074	1.87	.445	11.30
.086	2.18	.450	11.43
.112	2.84	.482	12.24
.125	3.17		

FIGURE 1. Connector, pin contacts, class SE - Continued.

Dash no (see notes 4 and 5)	Shell size	No. of contacts	Insert arrangement no. 3/ section (see note 6)	A ± 015 (0.38)	B ±.015 (0.38)	C ±.005 (0.12)	D ± 005 (0 12)	E ±.005 (0.12)	F ± 005 (0 12)	G BSC	H ± 005 (0.12)	J ± 025 (0.63)	Weight (max)(with (contacts) grams
1	8	14	10 No.1	1.520 (38.60)	.725 (18 41)	800 (20.32)	548 (13.91)	688 (17.47)	436 (11.07)	1.200 (30.48)	050 (1.27)	1 360 (34.54)	13 5
2	10	38	20 No.1	1.945 (49 40)	.725 (18.41)	1.220 (30.98)	.548 (13.91)	1.108 (28.14)	436 (11.07)	1.625 (41.27)	.050 (1.27)	1 360 (34.54)	20.0
3	12	88	30 No 1	2.780 (70.61)	.725 (18 41)	2.060 (52 32)	.548 (13.91	1.948 (49.47)	.436 (11.07)	2.460 (62.48)	.050 (1.27)	1.360 (34.54)	27 0
4	14	108	40 No.1	1.990 (50.54)	1.077 (27.35)	1 444 (36 67)	897 (22.78)	1.332 (33.83)	.785 (19.93)	1.718 (43.63)	.058 (1.47)	1.360 (34.54)	33 5
5	16	132	50 No.1	2.790 (70.86)	.902 (22.91)	2.068 (52.52)	732 (18.59)	1.956 (49.68)	.620 (15.74)	2.470 (62 73)	.100 (2.54)	1 360 (34.54)	38.5
6	18	244	60 No.1	4.128 (104.85)	.902 (22.91)	3.410 (86.61)	732 (18.59)	3 304 (83.92)	.630 (16 00)	3.808 (96 72)	.100 (2.54)	1 360 (34 54)	47.0
7	8	14	10 No 1	1.520 (36.60)	.725 (18.41)	800 (20 32)	548 (13.91)	688 (17 47)	436 (11.07)	1.200 (30.48)	.050 (1 27)	.898 (22.81)	13 5
8	10	38	20 No.1	1 945 (49.40)	.725 (18.41)	1.220 (30.98)	.548 (13.91)	1.108 (28.14)	.436 (11.07)	1.625 (41.27)	.050 (1.27)	.898 (22.81)	20.0
9	12	88	30 No.1	2 780 (70.61)	.725 (18 41)	2.060 (52.32)	548 (13.91)	1 948 (49.47)	.436 (11.07)	2 460 (62 48)	.050 (1 27)	.898 (22 81)	27.0
10	14	108	40 No 1	1.990 (50 54)	1 077 (27.35)	1 444 (36.67)	897 (22 78)	1 332 (33 83)	785 (19 93)	1 718 (43 63)	.058 (1.47)	.898 (22.81)	33.5
11	16	132	50 No.1	2.790 (70.86)	.902 (22.91)	2.068 (52.52)	732 (18.59)	1.956 (49.68)	.620 (15.74)	2.470 (62.73)	.100 (2.54)	.898 (22.81)	38.5
12	18	244	60 No.1	4.128 (104.85)	.902 (22.91)	3.410 (86.61)	732 (18.59)	3 304 (83.92)	.630 (16.00)	3.808 (96.72)	.100 (2.54)	.898 (22.81)	47.0

NOTES
1. Dimensions are in inches.
2. Metric equivalents are given for general information only.
3. Millimeters are in parentheses.
4. Dash number shall include N, V, W, X, Y, or Z to indicate polarization.
5. Dash numbers 1 through 6 are supplied with male turning jackscrews; dash numbers 7 through 12 are supplied with male fixed jackscrews
6. For insert arrangements, see MIL-STD-1632.

Ⓓ FIGURE 1. Connector, pin contacts, class SE - Continued.

REQUIREMENTS:

Dimensions and configuration: See figure 1.

Interface seal. A resilient interfacial seal shall be assembled onto the pin contacts but is not bonded onto the face of the pin insert.

Mating end of the contacts: Shall be in accordance with MIL-C-28804/9.

Mating connectors. M28804/11-1 through -6 mate with M28804/1-1 through -6, M28804/3-1 through -6, M28804/5-1 through -6, M28804/7-1 through -6. M28804/11-7 through -12 mate with M28804/1-7 through -12, M28804/3-7 through -12, M28804/5-7 through -12, and M28804/7-7 through -12.

(D) Part or Identifying Number (PIN): M28804/11- (dash number from figure 1 and a suffix letter code to define polarization. See figure 1, note 4 herein, and MIL-C-28804.)

(D) Dielectric withstanding voltage shall be in accordance with MIL-C-28804, except that the test voltages shall be as specified in table I.

(D) TABLE I. Test voltage (rms 60 Hz ac volts). 1/

Altitude (feet)	Moisture conditioned (see 4.6.12) samples	All other samples
Sea level	600	1200
70,000	---	500

1/ These are not working voltages.

(D) Contact resistance shall be in accordance with MIL-C-28804.

CONCLUDING MATERIAL

Custodians.
Army - CR
Navy - EC
Air Force - 85

Review activities:
Army - AT, MI
Navy - AS
Air Force - 85, 99
DLA - ES

User activities:
Army - AM, AR, ME
Navy - MC

Preparing activity
Navy - EC

Agent
DLA - ES

(Project 5935-3763-11)