MILITARY SPECIFICATION SHEET

(D) CONNECTORS, RECEPTACLE, ELECTRIC, RECTANGULAR, HIGH DENSITY, POLARIZED CENTER JACKSCREW, CRIMP REMOVABLE SOCKET CONTACTS, CLASS E

This specification is approved for use by all Departments and Agencies of the Department of Defense.

(D) The requirements for acquiring the product described herein shall consist of this specification sheet and the issue of the following specification listed in that issue of the Department of Defense Index of Specifications and Standards (DODISS) specified in the solicitation: MIL-C-28804.

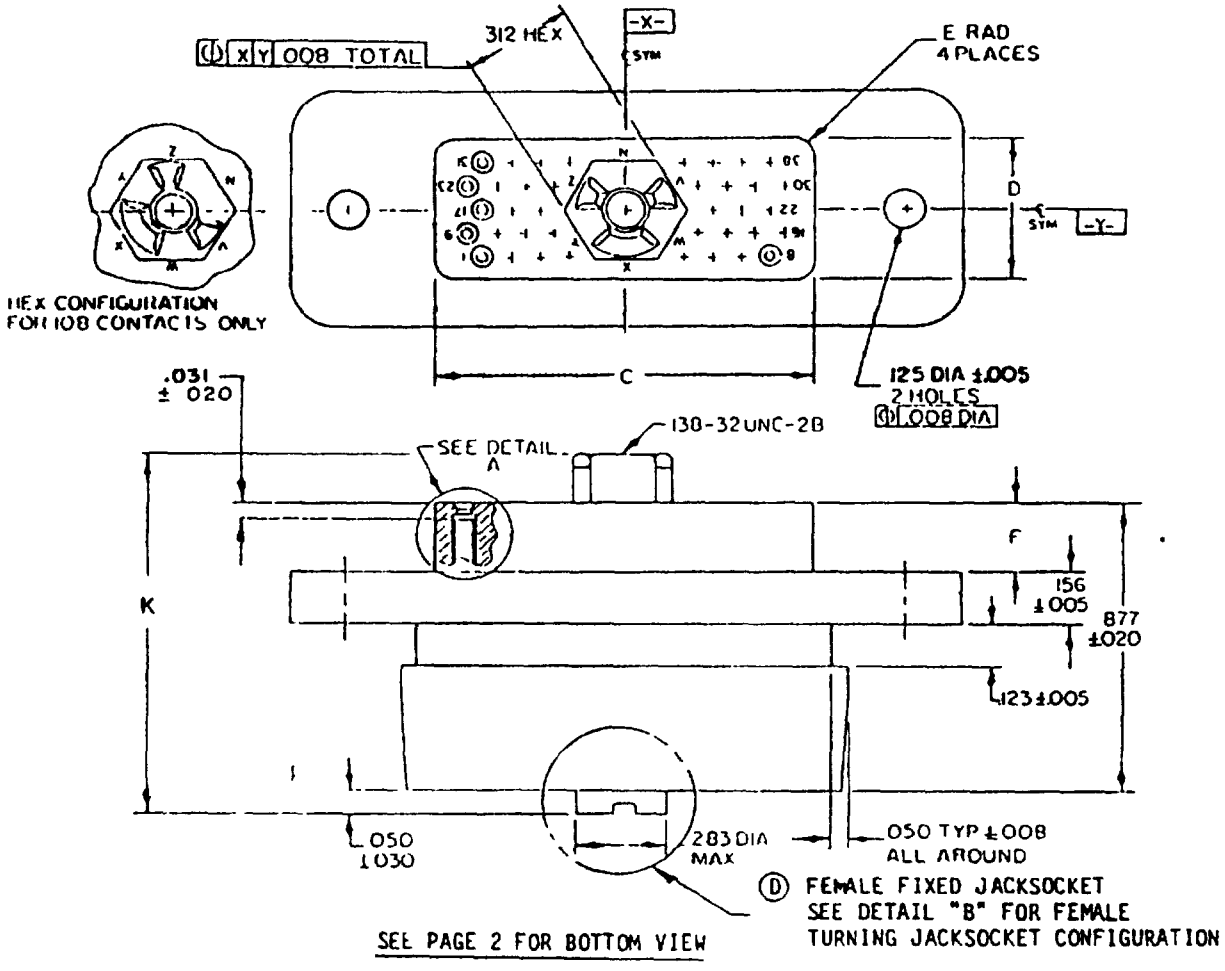

SEE PAGE 2 FOR BOTTOM VIEW

FIGURE 1. Connector, crimp removable socket contacts, class E

(D) denotes changes.

DISTRIBUTION STATEMENT A. Approved for public release, distribution is unlimited.

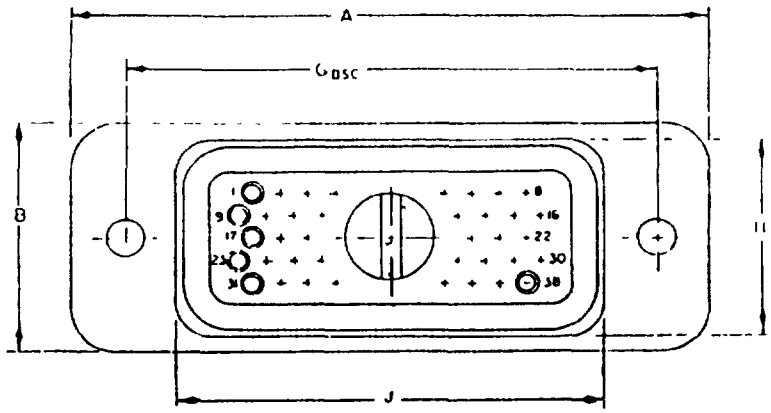

BOTTOM VIEW

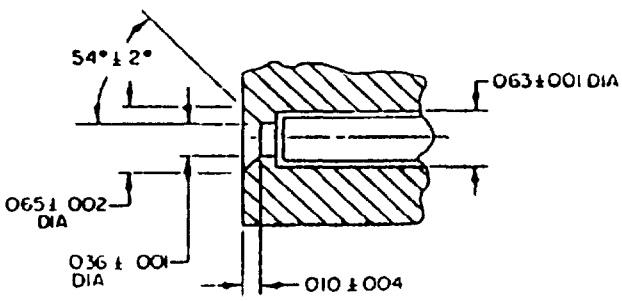

DETAIL A

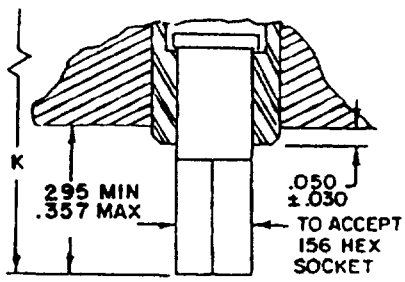

FEMALE TURNING JACKSOCKET

(D) DETAIL B

Inches	mm	Inches	mm
.001	0.03	.063	1.60
.002	0.05	.065	1.65
.004	0.10	.123	3.12
.005	0.13	.125	3.18
.008	0.20	.138	3.51
.010	0.25	.149	3.78
.020	0.51	.156	3.96
.030	0.76	.283	7.19
.031	0.79	.295	7.49
.036	0.91	.312	7.92
.050	1.27	.375	9.52
		.877	22.27

FIGURE 1. Connector, crimp removable socket contacts, class E - Continued.

Dash no (see notes 4 and 5)	Shell size	No of contacts	Insert arrangement no. 3/ section (see note 6)	A ±.015 (0 38)	B ±.015 (0 38)	C ±.005 (0 12)	D ±.005 (0.12)	E ±.005 (0.12)	F ±.015 (0.38)	G BSC	H ± 008 (0.20)	J ±.008 (0.20)	K ±.025 (0.63)	Weight (max)(with contacts) grams
1	8	14	10 No.1	1.520 (38.60)	.725 (18.41)	.674 (17.12)	.423 (10.74)	.056 (1.42)	.216 (5.48)	1.200 (30.48)	.625 (15.87)	.888 (22.65)	1.075 (27.31)	20 0
2	10	38	20 No.1	1.945 (49.40)	.725 (18.41)	1.095 (27 81)	.423 (10.74)	.056 (1.42)	.216 (5.48)	1.625 (41.27)	.625 (15.87)	1.308 (33.22)	1.075 (27.31)	25.0
3	12	88	30 No.1	2.780 (70.61)	.725 (18.41)	1.935 (49.14)	.423 (10.74)	.056 (1.42)	.216 (5.48)	2.460 (62.48)	.625 (15.87)	2.148 (54.55)	1.075 (27.31)	35.0
4	14	108	40 No.1	1.990 (50.54)	1.077 (27.35)	1.318 (33.47)	.772 (19.60)	.064 (1.62)	.216 (5.48)	1.718 (43.63)	.977 (24.81)	1.532 (38.91)	1.075 (27 31)	43 0
5	16	132	50 No.1	2.790 (70.86)	.902 (22.91)	1.943 (49.35)	.607 (15.41)	.106 (2.69)	.216 (5.48)	2.470 (62.73)	.802 (20.37)	2.156 (54.76)	1.075 (27.31)	51.0
6	18	244	60 No.1	4.128 (104.85)	.902 (22.91)	3.284 (83.41)	.610 (15.49)	.110 (2 79)	.216 (5 48)	3.808 (96.72)	.802 (20.37)	3.494 (88.74)	1.075 (27.31)	56.0
7	8	14	10 No.1	1.520 (36.60)	.725 (18.41)	.674 (17.12)	.423 (10.74)	.056 (1.42)	.216 (5.48)	1.200 (30.48)	.625 (15.87)	.888 (22.55)	1.355 (34.42)	22.5
8	10	38	20 No.1	1.945 (49.40)	.725 (18.41)	1.095 (27.81)	.423 (10.74)	.056 (1.42)	.216 (5.48)	1.625 (41.27)	.625 (15.87)	1.308 (33.22)	1.355 (34.42)	27.5
9	12	88	30 No.1	2.780 (70.61)	.725 (18.41)	1.935 (49.14)	.423 (10.74)	.056 (1 42)	216 (5 48)	2.460 (62 48)	.625 (15.87)	2.148 (54.55)	1.355 (34.42)	37 5
10	14	108	40 No.1	1.990 (50.54)	1.077 (27.35)	1.318 (33.47)	.772 (19.60)	064 (1.62)	.216 (5.48)	1.718 (43.63)	.977 (24.81)	1.532 (38.91)	1.355 (34.42)	45.5
11	16	132	50 No.1	2.790 (70.86)	.902 (22.91)	1 943 (49 35)	.607 (15.41)	106 (2.69)	216 (5 48)	2 470 (62.73)	.802 (20/37)	2.156 (54.76)	1 355 (34.42)	53 5
12	18	244	60 No.1	4.128 (104 85)	.902 (22.91)	3.284 (83 41)	610 (15 49)	110 (2 79)	.216 (5 48)	3.808 (96 72)	.802 (20 37)	3.494 (88.74)	1.355 (34 42)	58.5

NOTES

1. Dimensions are in inches.
2. Metric equivalents are given for general information only.
3. Millimeters are in parentheses.
4. Dash number shall include N, V, W, X, Y, or Z to indicate polarization.
5. (D) Dash numbers 1 through 6 are supplied with female fixed jacksockets; dash numbers 7 through 12 are supplied with female turning jacksockets.
6. For insert arrangements, see MIL-STD-1632.

(D) FIGURE 1. Connector, crimp removable socket contacts, class E - Continued.

REQUIREMENTS:

Dimensions and configuration: See figure 1.

Contacts: Shall be in accordance with MIL-C-28804/10.

Mating connectors: M28804/3-1 through -6 mates with M28804/2-1 through -6, M28804/4-1 through -6, M28804/6-1 through -6, M28804/8-1 through -6, and M28804/11-1 through -6. M28804/3-7 through -12 mates with M28804/2-7 through -12, M28804/4-7 through -12, M28804/6-7 through -12, M28804/8-7 through -12, and M28804/11-7 through -12.

(D) Part or Identifying Number (PIN). M28804/3- (dash number from figure 1 and a suffix letter code to define polarization. See figure 1, note 4 herein, and MIL-C-28804.)

CONCLUDING MATERIAL

Custodians:
Army - CR
Navy - EC
Air Force - 85

Review activities:
Army - AT, MI
Navy - AS
Air Force - 85, 99
DLA - ES

User activities:
Army - AM, AR, ME
Navy - MC

Preparing activity:
Navy - EC

Agent:
DLA - ES

(Project 5935-3763-03)