MILITARY SPECIFICATION SHEET

MIXER STAGES, RADIO FREQUENCY, DOUBLE BALANCED, SMA FEMALE CONNECTORS

This specification is approved for use by all Departments and Agencies of the Department of Defense.

The complete requirements for acquiring mixers described herein shall consist of this specification and the latest issue of MIL-M-28837.

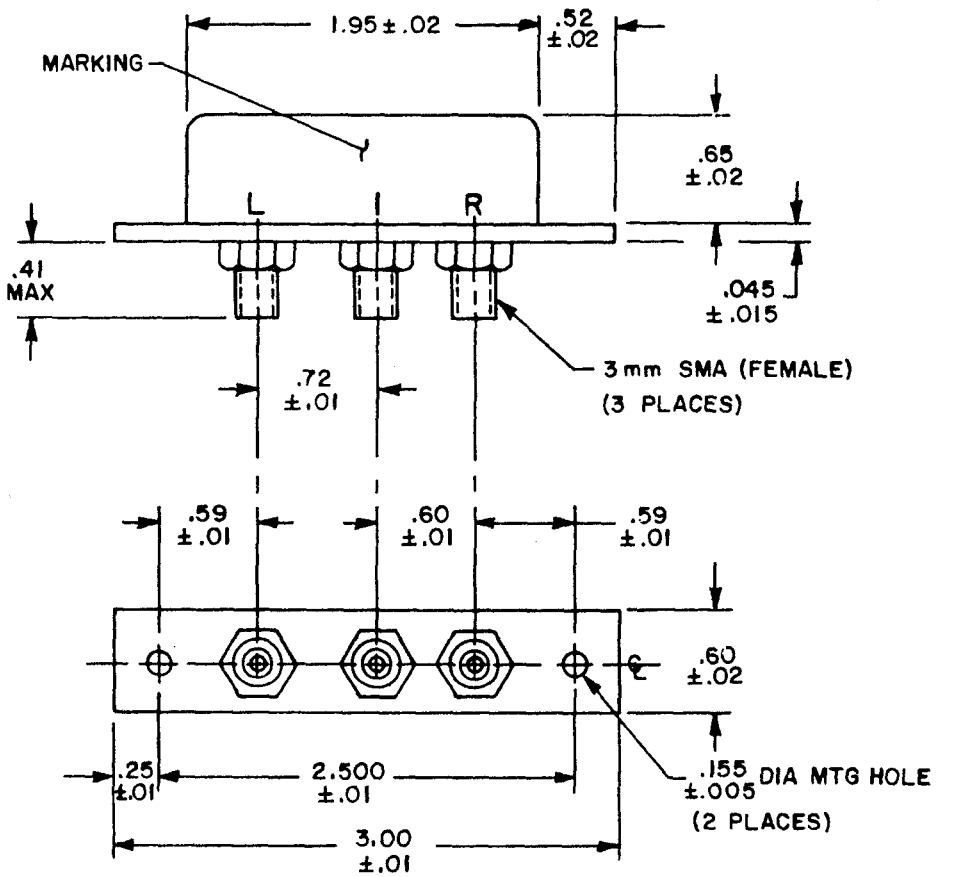

INCHES	MM
.005	0.13
.01	0.3
.015	0.38
.02	0.5
.045	1.14
.155	3.94
.25	6.4
.41	10.4
.52	13.2
.59	15.0
.60	15.2
.65	16.5
.72	18.3
1.95	49.5
2.50	63.5
3.00	76.2

NOTES:
1. Dimensions are in inches.
2. Metric equivalents are given for general information only.

FIGURE 1. Outline drawing for mixers P/N M28837/5-01 through -04.

FSC 5985

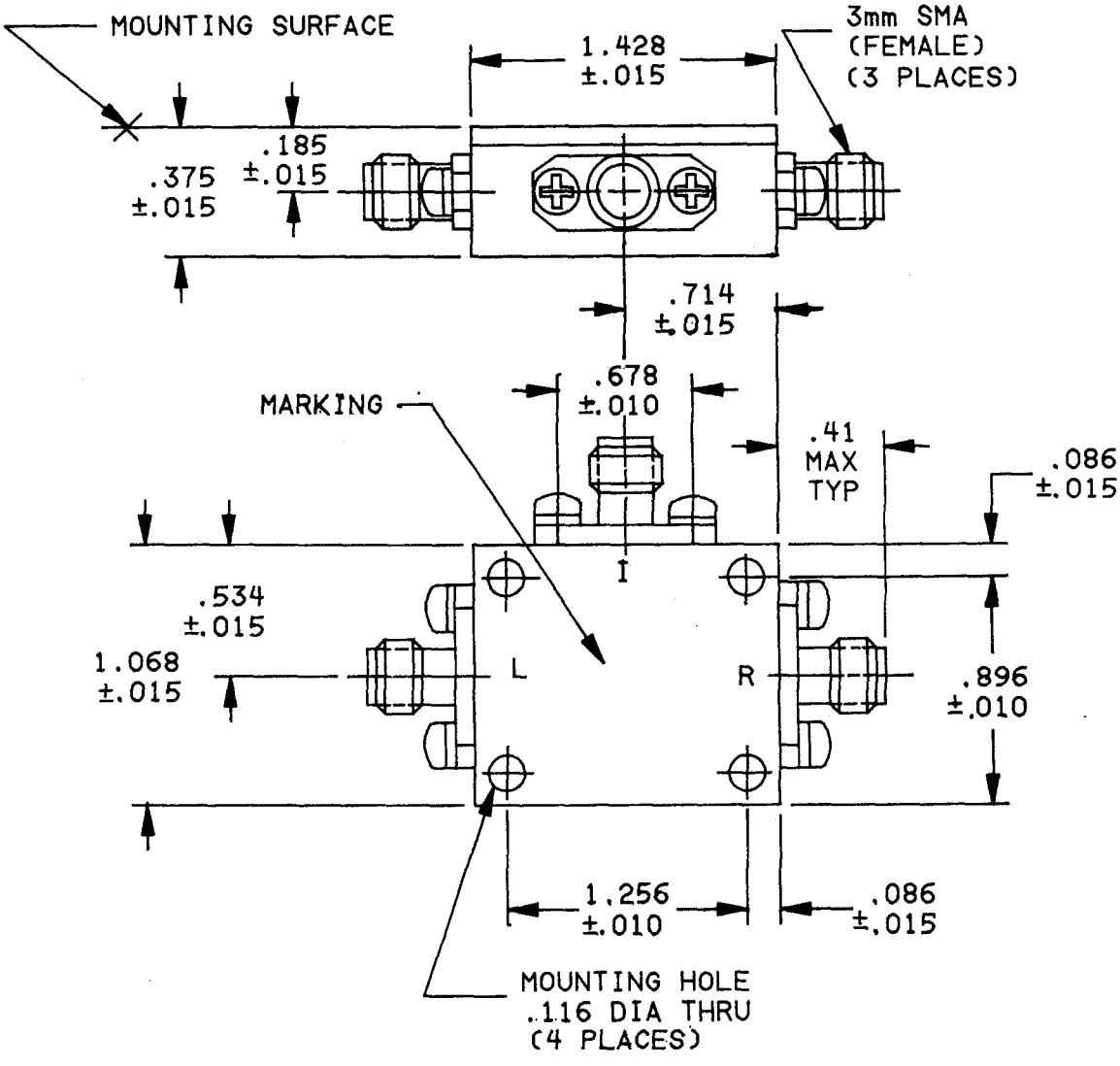

INCHES	MM
.010	0.25
.015	0.38
.086	2.18
.116	2.95
.185	4.70
.375	9.53
.41	10.4
.534	13.56
.714	18.14
.896	22.76
1.068	27.13
1.256	31.90
1.428	36.27

NOTES:
1. Dimensions are in inches.
2. Metric equivalents are given for general information only.

FIGURE 2. Outline drawing for mixers P/N M28837/5-05.

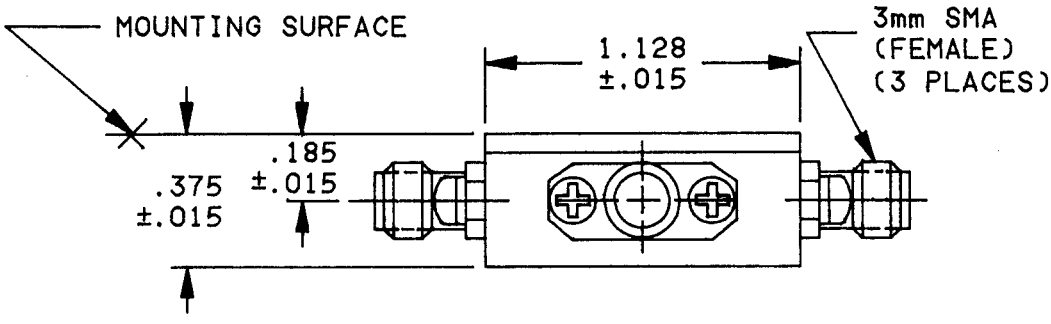

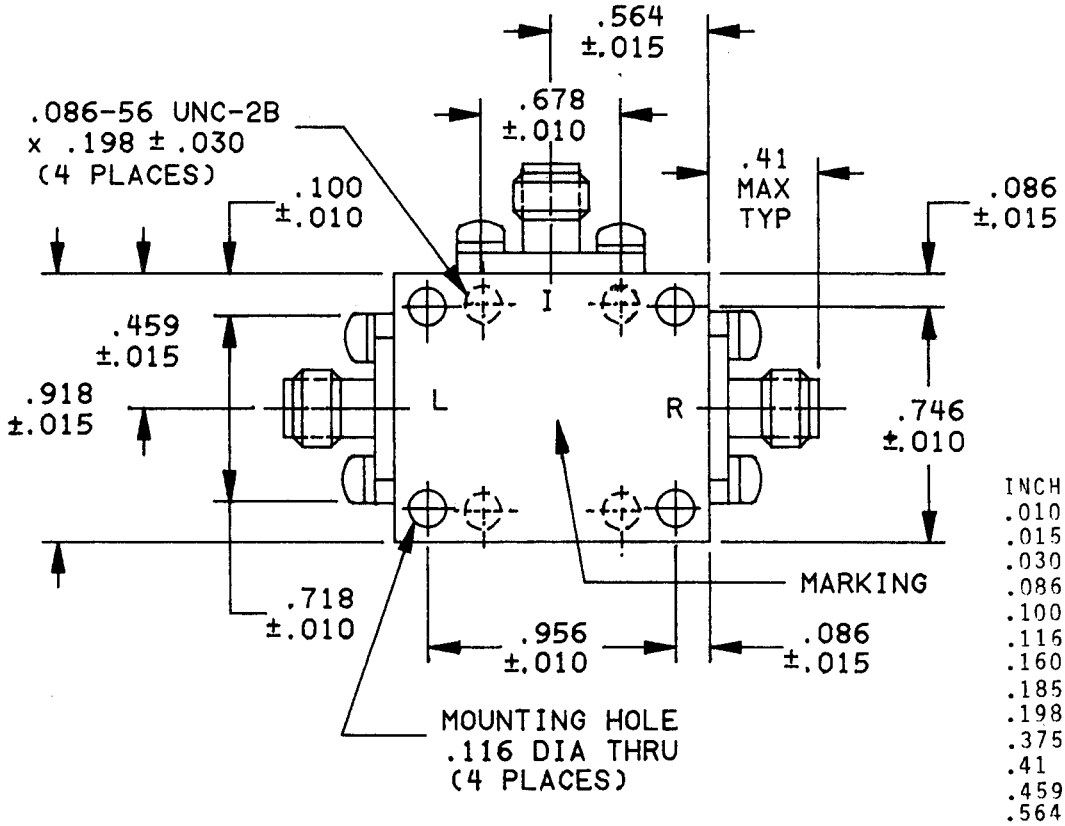

INCHES	MM
.010	0.25
.015	0.38
.030	0.76
.086	2.18
.100	2.54
.116	2.95
.160	4.06
.185	4.70
.198	5.03
.375	9.53
.41	10.4
.459	11.66
.564	14.33
.678	17.22
.718	18.24
.746	18.95
.918	23.32
.956	24.28
1.128	28.65

NOTES:
1. Dimensions are in inches.
2. Metric equivalents are given for general information only.

FIGURE 3. Outline drawing for mixers P/N M28837/5-06.

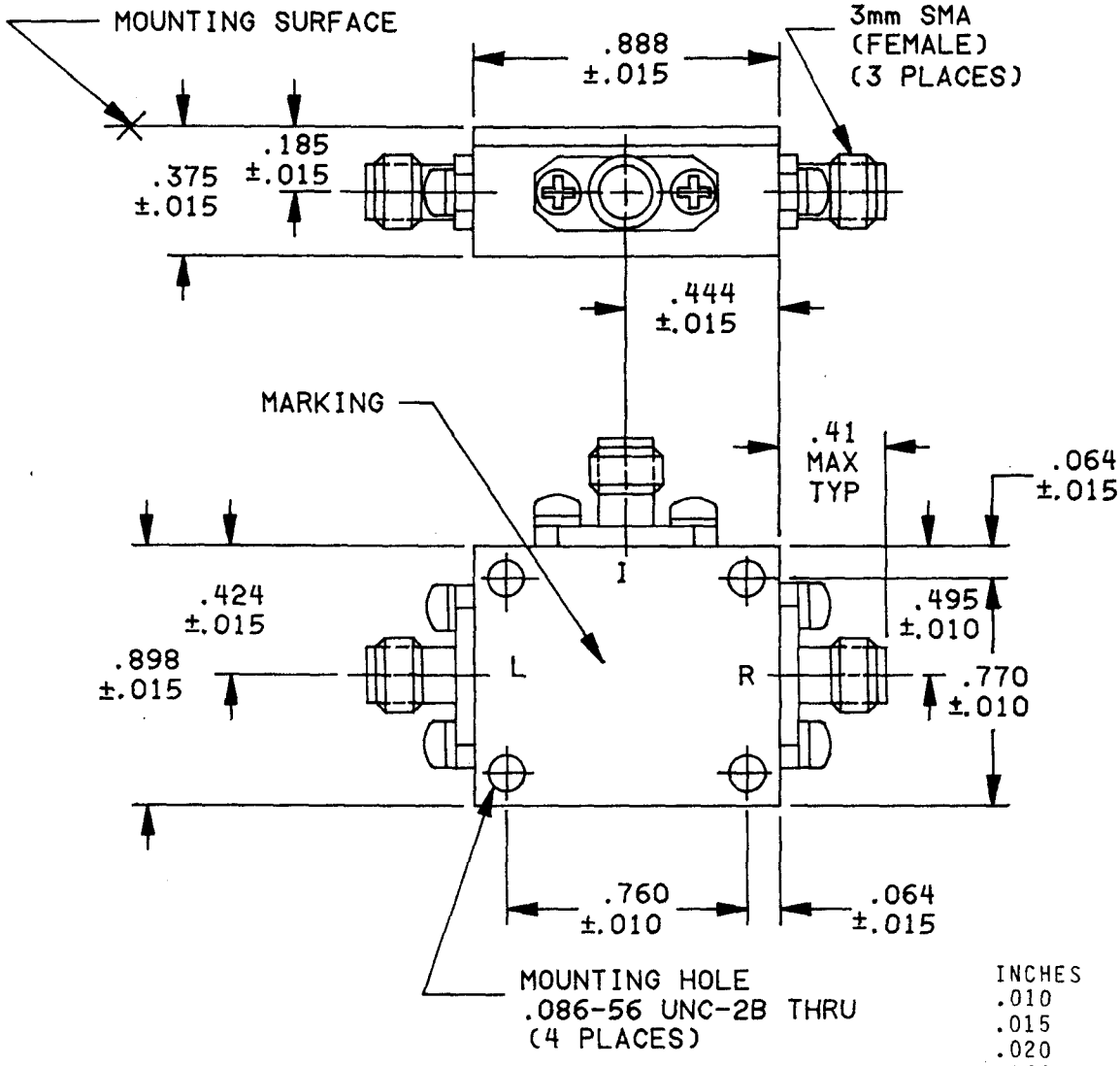

INCHES	MM
.010	0.25
.015	0.38
.020	0.51
.064	1.63
.086	2.18
.185	4.70
.375	9.53
.41	10.4
.424	10.77
.444	11.28
.495	12.57
.760	19.30
.770	19.56
.888	22.55
.898	22.81

NOTES:
1. Dimensions are in inches.
2. Metric equivalents are given for general information only.

FIGURE 4. Outline drawing for mixers P/N M28837/5-07.

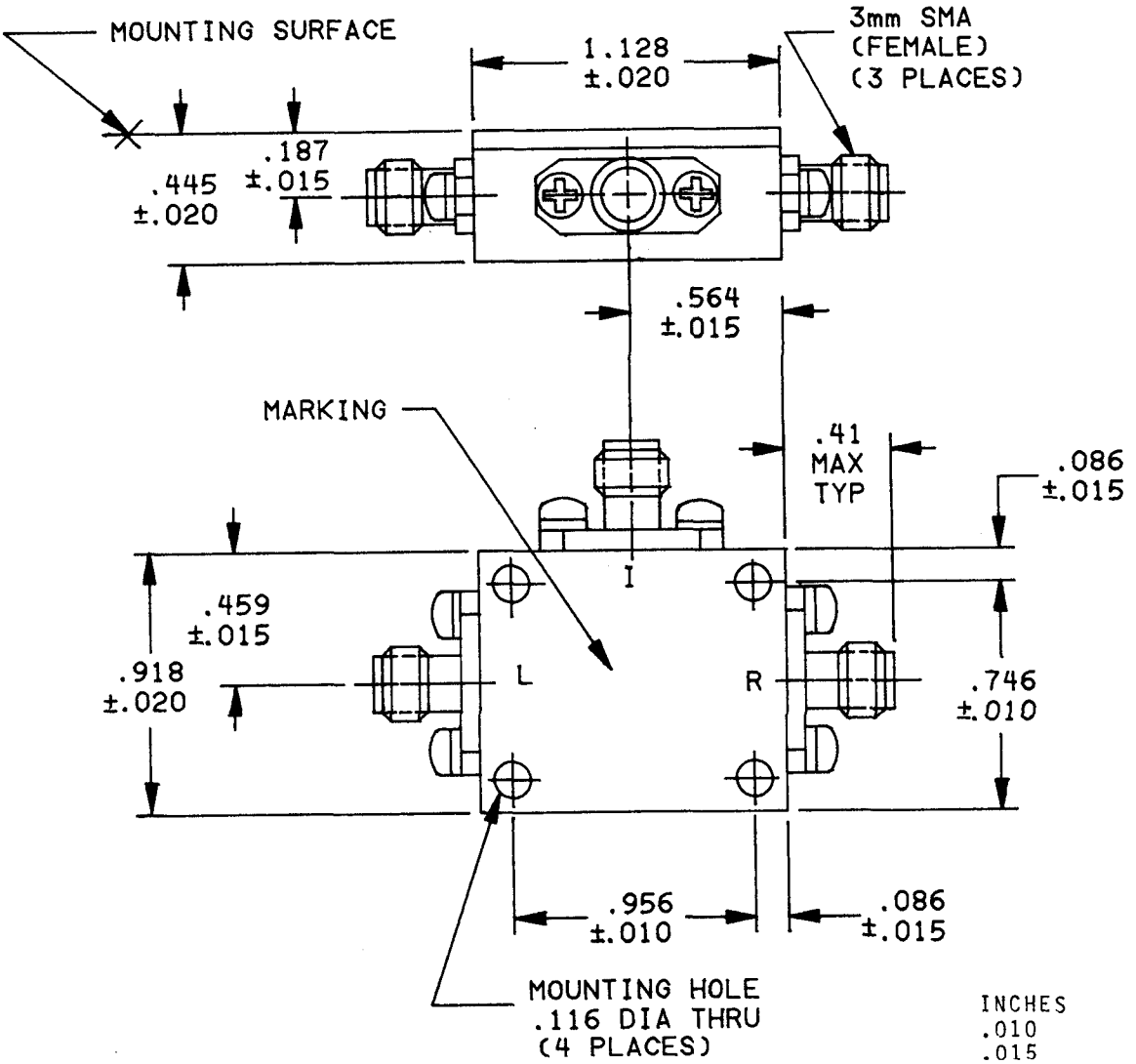

INCHES	MM
.010	0.25
.015	0.38
.020	0.51
.086	2.18
.116	2.95
.187	4.75
.41	10.4
.445	11.30
.459	11.66
.564	14.33
.746	18.95
.918	23.32
.956	24.28
1.128	28.65

NOTES:
1. *Dimensions are in inches.*
2. Metric equivalents are given for general information only.

FIGURE 5. Outline drawing for mixers P/N M28837/5-08 through -10.

REQUIREMENTS:

Design and construction:

Dimensions and construction: See figures 1 through 5.

Electrical characteristics:

Frequency range: See table I.

Input drive power: See table I.

Conversion loss (max): See table I.

Noise figure (SSB) (max): See table I.

Isolation: See table I.

Maximum power input (rms): See table I.

DC relative polarity: See table I.

VSWR: See table I.

Third order, two tone intermodulation: See table I.

Impedance: 50 ohms.

Physical and environmental characteristics:

Weight: See table II.

Temperature: See table II.

Shock: See table II.

Seal: Nonhermetic. Paragraph 4.8.8.2 of MIL-M-28837 applies.

Part number: M28837/5- (dash number from tables I and II).

Substitutability data: See table III.

TABLE I. Electrical characteristics.

Dash no.	Operating frequency range	LO input drive power in dBm 1/	Maximum conversion loss (SSB) dB	Noise figure (SSB) dB	Isolation Minimum LO-RF dB	Isolation Minimum LO-IF dB	Isolation Minimum RF-IF dB	Frequency
01N 01S	MHz RF 300-1000 LO 300-1000 IF DC-1000	minimum +4 TV +7 maximum +13	7.5 8 at: f_L and f_R 1.0-1.7 GHz f_I .01-.5 GHz f_I .5-1.0 GHz	7.5 8 at: f_L and f_R 1.0-1.7 GHz f_I .01-.5 GHz f_I .5-1.0 GHz	45	35	20	.3 -1 GHz
			9 10 at: f_L and f_R .3-2.0 GHz f_I .01-.45 GHz f_I .45-1.0 GHz	9 10 at: f_L and f_R .3-2.0 GHz f_I .01-.45 GHz f_I .45-1 GHz	40	30	N/A	1.0-2.0 GHz
02N 02S	GHz RF 1-4.2 LO 1-4.2 IF DC-1.0	minimum +4 TV +7 maximum +13	8.5 at: f_L and f_R 1-1.5 GHz f_I .01-.5 GHz	8.5 at: f_L and f_R 1-1.5 GHz f_I .01-.5 GHz	25	15	N/A	1.0-4.2 GHz
			7.5 at: f_L and f_R 1.5-4.2 GHz f_I .01-1.0 GHz	7.5 at: f_L and f_R 1.5-4.2 GHz f_I .01-1 GHz				
03N 03S	MHz RF .2-500 LO .2-500 IF DC-500	minimum +4 TV +7 maximum +13	6.5 at: f_L, f_R and f_I 1-50 MHz	6.5 at: f_L, f_R and f_I 1-50 MHz	45	40	35	2-50 MHz
			8.5 at: f_L, f_R and f_I 2-500 MHz	8.5 at: f_L, f_R and f_I 1-500 MHz	35	25	20	50-500 MHz
04N 04S	GHz RF 1-4 LO 1-4 IF DC 1.0	minimum +16 TV +20 maximum +23	8.0 at: f_L 1.2-4 GHz f_R 1.2-3.5 GHz f_I DC-.5 GHz	8.0 at: f_L 1.2-4 GHz f_R 1.2-3.5 GHz f_I DC-.5 GHz	20	10 15	N/A	1-4 GHz 1-2 GHz 2-4 GHz
			9.5 at: f_L and f_R 1-4 GHz f_I DC-1 GHz	9.5 at: f_L and f_R 1-4 GHz f_I DC-1 GHz				
05N 05S	GHz RF 2.5-5.5 LO 2.5-7.0 IF DC-1.5	minimum +7 TV +9 maximum +13	6.5 at: f_L 3-5.5 GHz f_R 3-5.0 GHz f_I .03-0.5 GHz	6.5 at: f_L 3-5.5 GHz F_R 3-5.0 GHz f_I .03-0.5 GHz	30	17	20	2.5-7 GHz 2.5-3.5 GHz 3.5-7.0 GHz
			7.0 at: f_L 2.5-7.0 GHz f_R 2.5-5.5 Ghz f_I .03-1.5 GHz	7.0 at: f_L 2.5-7.0 f_R 2.5-5.5 GHz f_I .03-1.5 GHz				

See footnotes at end of table.

TABLE I. Electrical characteristics - Continued.

Dash no.	RF & LO 2/ maximum power input (rms)	Conversion compression (maximum)	Desensitization (maximum)	Relative dc polarity 3/	VSWR (maximum)			Third order, two tone intermodulation	
					LO	IF	RF	dBm	Frequencies
01N 01S	400 mW	1.0 dB @ P_R 0 dBm	1.0 dB @ P_{R2} -3 dBm	Positive	2.5:1	2.3:1	16.0:1	+10	f_{LO}: 1.2 GHz f_{R1}: 2 GHz @ -10 dBm f_{R2}: 1.99 GHz @ -10 dBm
02N 02S	50 mW	1.0 dB @ P_R +0 dBm	1.0 dB @ P_{R2} -3 dBm	Negative	3.5:1	2.4:1	8.5:1	+8	f_{LO}: 2 GHz f_{R1}: 1.5 GHz @ -10 dBm f_{R2}: 1.51 GHz @ -10 dBm
03N 03S	50 mW	0.3 dB @ P_R +1 dBm	1.0 dB @ P_{R2} +1 dBm	Negative					
04N 04S	400 mW	1.0 dB @ P_R +13 dBm	1.0 dB @ P_{R2} +8 dBm	Negative	3.4:1	4.0:1	3.5:1	4/	f_{LO}: 2.0 GHz f_{R1}: 1.5 GHz @ -5 dBm f_{R2}: 1.51 GHz @ -5 dBm
05N 05S	200 mW	1.0 dB @ P_R +3 dBm	1.0 dB @ P_{R2} -2 dBm	Positive	2.5:1	2.5:1	3.3:1	11 4/	f_{LO}: 5.0 GHz f_{R1}: 4.0 GHz @ -10 dBm f_{R2}: 4.01 GHz @ -10 dBm

See footnotes at end of table.

TABLE I. Electrical characteristics - Continued.

Dash no.	Operating frequency range (GHz)	LO input drive power in dBm 1/	Maximum conversion loss (SSB) dB	(GHz)	Noise figure (SSB) dB	(GHz)	Isolation Minimum LO-RF dB	LO-IF dB	RF-IF dB	Frequency (GHz)
06N 06S	RF 4.5-9.5 LO 2.5-11.5 IF DC-2.0	minimum +7 TV +10 maximum +13	7.0	at: f_L 4-10 f_R 5-9 f_I 0.03-1	7.0 7.5	at: f_L 4-10 f_R 5-9 f_I 0.03-1	25 20			2.5-9.0 9-11.5
								15 10		4-11.5 2.5-4
			8.0	at: f_L 2.5-11 f_R 4.5-9.5 f_I 0.03-2	8.0	at: f_L 2.5-11 f_R 4.5-9.5 f_I 0.03-2			15 18	4.5-8 8-9.5
07N 07S	RF 7-18 LO 5-18 IF DC-3	minimum +7 TV +10 maximum +13	8.0	at: f_L 5-18 f_R 7-16 f_I 0.03-3 $f_L > f_R$	8.0	at: f_L 5-18 f_R 7-16 f_I 0.03-3	22 15			5-14 14-18
								12 22		5-8 8-18
			8.5	at: f_L 5-16 f_R 8-16 f_I 0.03-3 $f_L < f_R$	8.5	at: f_L 5-16 f_R 8-16 f_I 0.03-3			23 15	.03-8 8-18
			9.0	at: f_L 13-18 f_R 16-18 f_I 0.03-3	9.0	at: f_L 13-18 f_R 16-18 f_I 0.03-3				
08N 08S	RF 1-18 LO 2-18 IF DC-5	minimum +10 TV +13 maximum +16	8.0	at: f_L 5-13 f_R 5-13 f_I 0.03-2	8.0	at: f_L 5-13 f_R 5-13 f_I 0.03-2	18	20		2-18
									25 28	1-2 2-5
			9.0	at: f_L 2-18 f_R 2-16 f_I 0.03-4	9.0	at: f_L 2-18 f_R 2-16 f_I 0.03-4				
			10	at: f_L 2-18 f_R 1-18 f_I 0.03-5	10	at: f_L 2-18 f_R 1-18 f_I DC-5				
09N 09S	RF 2-18 LO 2-18 IF 1-8	minimum +10 TV +13 maximum +16	10	at: f_L 2-18 f_R 2-10 f_I 1-8	10	at: f_L 2-18 f_R 2-10 f_I 1-8	15	16	20	2-18
			10.5	at: f_L 10-18 f_R 10-18 f_I 2-8	10.5	at: f_L 10-18 f_R 10-18 f_I 2-8				
			11	at: f_L 2-10 f_R 10-18 f_I 2-8	11	at: f_L 2-10 f_R 10-18 f_I 2-8				
10N 10S	RF 2-18 LO 2-18 IF DC-4	minimum +7 TV +10 maximum +13	10	at: f_L 2-14 f_R 2-10 f_I 0.03-4	10	at: f_L 2-14 f_R 2-10 f_I 0.03-4	15	16		2-18
									20 15	2-8 8-18
			11	at: f_L 6-18 f_R 10-18 f_I 0.03-4	11	at: f_L 6-18 f_R 10-18 f_I 0.03-4				

See footnotes at end of table.

TABLE I. Electrical characteristics - Continued.

Dash no.	RF & LO 2/ maximum power input (rms)	Conversion compression (maximum)	Desensitization (maximum)	Relative dc polarity 3/	VSWR (maximum)			Third order, two tone intermodulation	
					LO	IF	RF	dBm	Frequencies
06N 06S	200 mW	1.0 dB @ P_R +3 dBm	1.0 dB @ P_{R2} -2 dBm	Positive	2.1:1	3.5:1	2.2:1	+13 4/	f_{LO}: 8 GHz f_{R1}: 7 GHz @ -6 dBm f_{R2}: 7.01 GHz @ -6 dBm
07N 07S	200 mW	1.0 dB @ P_R +4 dBm	1.0 dB @ P_{R2} -2 dBm	Positive	2.3:1	3.3:1	3.0:1	+15 4/	f_{LO}: 14 GHz f_{R1}: 13 GHz -6 dBm f_{R2}: 13.01 GHz -6 dBm
08N 08S	400 mW	1.0 dB @ P_R +6 dBm	1.0 dB @ P_{R2} -2 dBm	Positive	3.0:1	2.0:1	3.5:1	+19 4/	f_{LO}: 18 GHz f_{R1}: 15 GHz @ -3 dBm f_{R2}: 15.01 GHz @ -3 dBm
09N 09S	400 mW	1.0 dB @ P_R +7 dBm	1.0 dB @ P_{R2} -2 dBm	Positive	3.3:1	1.8:1	3.5:1	+22 4/	f_{LO}: 18 GHz f_{R1}: 15 GHz @ -3 dBm f_{R2}: 15.01 GHz @ -3 dBm
10N 10S	400 mW	1.0 dB @ P_R +4 dBm	1.0 dB @ P_{R2} -2 dBm	Positive	3.0:1	2.0:1	4.0:1	+18 4/	f_{LO}: 18 GHz f_{R1}: 15 GHz @ -6 dBm f_{R2}: 15.01 GHz @ -6 dBm

1/ Unless otherwise specified, TV is the test value of the LO power for the electrical characteristics.

2/ These values are for +25°C and are derated linearly to +125°C.

3/ With two in-phase signals applied to the LO and RF ports.

4/ Input intercept points.

TABLE II. Physical and environmental characteristics. 1/

Dash no.	Weight	Temperature range in celsius (operating on top nonoperating on bottom)	Mechanical shock (method 213) 2/
01	1.1 oz. (31 g)	-54° to +100° -65° to +100°	---
02	1.1 oz. (31 g)	-54° to +100° -65° to +100°	---
03	1.1 oz. (31 g)	-54° to +100° -65° to +100°	---
04	1.1 oz. (31 g)	-54° to +100° -65° to +100°	---
05	1.6 oz. (4.5 g)	-54° to +100° -65° to +100°	C
06	1.27 oz. (36 g)	-54° to +100° -65° to +100°	C
07	1.06 oz. (30 g)	-54° to +100° -65° to +100°	C
08	1.41 oz. (40 g)	-54° to +100° -65° to +100°	C
09	1.41 oz. (40 g)	-54° to +100° -65° to +100°	C
10	1.41 oz. (40 g)	-54° to +100° -65° to +100°	C

1/ Where --- is indicated, reference requirements as set forth in MIL-M-28837.

2/ Reference MIL-STD-202.

Substitutability data: The mixers covered by this specification sheet are substitutable for the user's or manufacturer's part numbers specified in table III. This information in no way implies that the manufacturer's part number or NSN is suitable as a substitute for the military part number.

TABLE III. Substitutability data.

Dash number	Manufacturer's code	Commercial type	NSN
01	80063	SM-A-800801-1	---
01	14482	M1-J	---
02	97942	581R960H01	5841-01-009-1098
02	14482	M1G	5985-01-024-1171
02	26512	GM821A2	5985-01-024-1171
02	10001	2938629-1	---
03	97871	550-5626-001	---
03	14482	M1	---
03	87990	725016A1147-1	---
04	24930	G300306-1	---
04	14482	M1K	---
05	14482	M63C	---
06	14482	M76C	---
07	14482	M79C	---
08	14482	M83C	---
09	14482	M88C	---
10	14482	M93C	---

Revision letters are not used to denote changes due to the extensiveness of the changes.

Custodians:
Army - ER
Navy - EC
Air Force - 85

Review activities:
Army - MI
Navy - EC, OS
Air Force - 11, 17, 99
DLA - ES

User activities:
Army - AR
Navy - AS, CG, MC
Air Force - 14, 19

Agent:
DLA - ES

Preparing activity:
Navy - EC

(Project 5985-0987-3)