FED SUP CLASS
5935

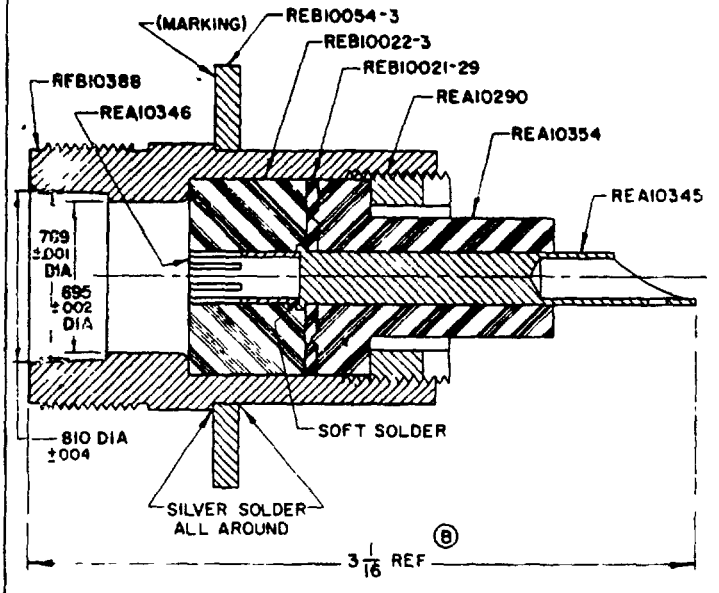

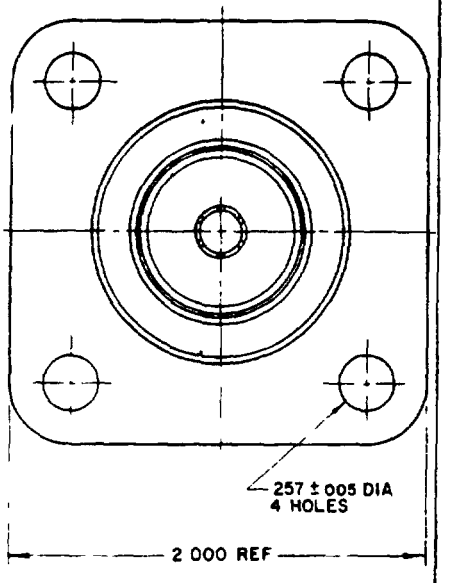

MS PART NO MS91610-352B

BUREAU OF SHIPS DRAWING NO	DESCRIPTION	QUANTITY
REA10290	Spanner nut	1
REA10345	Contact	1
REA10354	Contact	1
REB10054	Insulator	-
REB10021-29	Gasket	-
REB10022-3	Insulator	
REB10054-3	Mounting plate	1
REB10388	Body	1

NOTES

1. All dimensions in inches
2. The dielectric withstanding test voltage shall be 5,000 volts root mean square
3. Receptacle UG-352B/U replaces receptacles UG-352/U and -352A/U
4. The MS part number consists of the MS military-standard number followed by a dash number. The dash number 352B" is derived from assigned nomenclature
5. Referenced documents shall be of the issue in effect on date of invitations for bids
6. For design feature purposes, this standard takes precedence over procurement documents referenced herein

ENGINEERING DATA WEATHERPROOF, PRESSURIZED (30 PSI), RADIOFREQUENCY, COAXIAL RECEPTACLE CONNECTOR, NOMINAL IMPEDANCE, 50 OHMS, RATED AT 5,000 VOLTS, PEAK, PRACTICAL FREQUENCY LIMIT, 1,000 MC/SEC

(Project 59 5-354)

For change, see sheet 1

APPROVED 21 Sept 1954 REVISED (A) 2 Dec 1960 (B) 11 Sept 1961

P A Ships Other Cust SigC USAF	TITLE CONNECTOR, RECEPTACLE, ELECTRICAL, SERIES LC, UG-352B/U	MILITARY STANDARD MS 91610	
PROCUREMENT SPECIFICATION MIL-C-3650	SUPERSEDES	SHEET 1 OF 1	

NOTICE - When Government drawings, specifications, or other data are used for any purpose other than in connection with a definitely related Government procurement operation, the United States Government thereby incurs no responsibility nor any obligation whatsoever, and the fact that the Government may have formulated, furnished, or in any way supplied the said drawings, specifications, or other data is not to be regarded by implication or otherwise as in any manner licensing the holder or any other person or corporation, or conveying any rights or permission to manufacture, use or sell any patented invention that may in any way be related thereto.

This military standard is approved by the Department of Defense and is mandatory on all activities. Selection for all new engineering and design applications and for repetitive use shall be made from this document.