MILITARY SPECIFICATION SHEET

CONNECTOR, PLUG, ELECTRICAL, CLASS I

(COAXIAL, SERIES TWIN), TYPE UG-1060A/U

This specification is approved for use by all Departments and Agencies of the Department of Defense.

The complete requirements for procuring the connector described herein shall consist of this document and the latest issue of Specification MIL-C-3655.

INACTIVE FOR NEW DESIGN

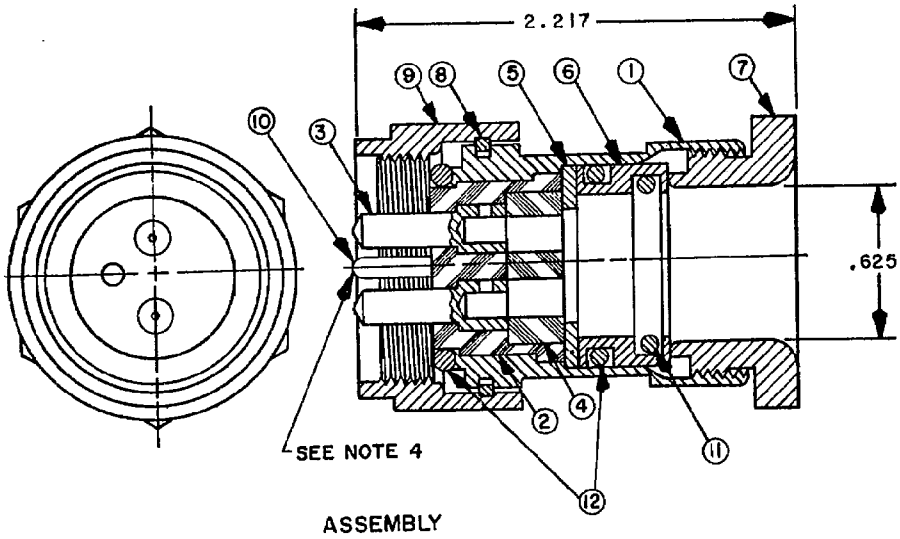

FIGURE 1. Type UG-1060A/U electrical plug connector.

(D) denotes changes

FSC 5935

Item	Description	Material	Quantity
1	Body	Brass	1
2	Insulator	Polytetrafluoroethylene	1
3	Center contact	Brass	2
4	Insulator	Polytetrafluoroethylene	1
5	Washer	Brass	1
6	O-ring adapter	Brass	1
7	Cable clamp	Brass	1
8	Retaining ring	Phosphor bronze	1
9	Coupling nut	Brass	1
10	Locating pin	Brass	1
11	O-ring	(See AN6227-12)	1
12	O-ring	(See AN6227-13)	2

INCHES	MM	INCHES	MM	INCHES	MM	INCHES	MM	INCHES	MM
.001	.03	.111	2.82	.250	6.35	.680	17.27	.933	23.70
.002	.05	.118	3.00	.252	6.40	.685	17.40	.937	23.80
.003	.08	.120	3.05	.281	7.14	.688	17.48	.995	25.27
.004	.10	.125	3.18	.312	7.92	.710	18.03	1.000	25.40
.005	.13	.135	3.43	.344	8.74	.736	18.69	1.015	25.78
.015	.38	.141	3.58	.375	9.52	.750	19.05	1.031	26.19
.016	.41	.156	3.96	.406	10.31	.775	19.68	1.090	27.69
.031	.79	.159	4.04	.465	11.81	.781	19.84	1.105	28.07
.045	1.14	.171	4.34	.468	11.89	.802	20.37	1.125	28.58
.058	1.47	.172	4.37	.499	12.67	.807	20.50	1.146	29.11
.062	1.57	.188	4.78	.500	12.70	.812	20.62	1.156	29.36
.065	1.65	.215	5.46	.562	14.27	.833	21.16	1.172	29.77
.090	2.29	.216	5.49	.592	15.04	.840	21.34	1.281	32.54
.094	2.39	.218	5.54	.625	15.88	.895	22.73	1.312	33.32
.105	2.67	.219	5.56	.641	16.28	.896	22.76	2.217	56.31
.109	2.77	.234	5.94	.646	16.41	.906	23.01		

NOTES:
1. Dimensions are in inches.
2. Metric equivalents are given for general information only and are based upon 1.00 inch = 25.4 mm.
3. Unless otherwise specified, tolerance is ±.005 (.13 mm).
4. Press fit locating pin, item 10, into insulator, item 2.

FIGURE 1. Type UG-1060A/U electrical plug connector - Continued.

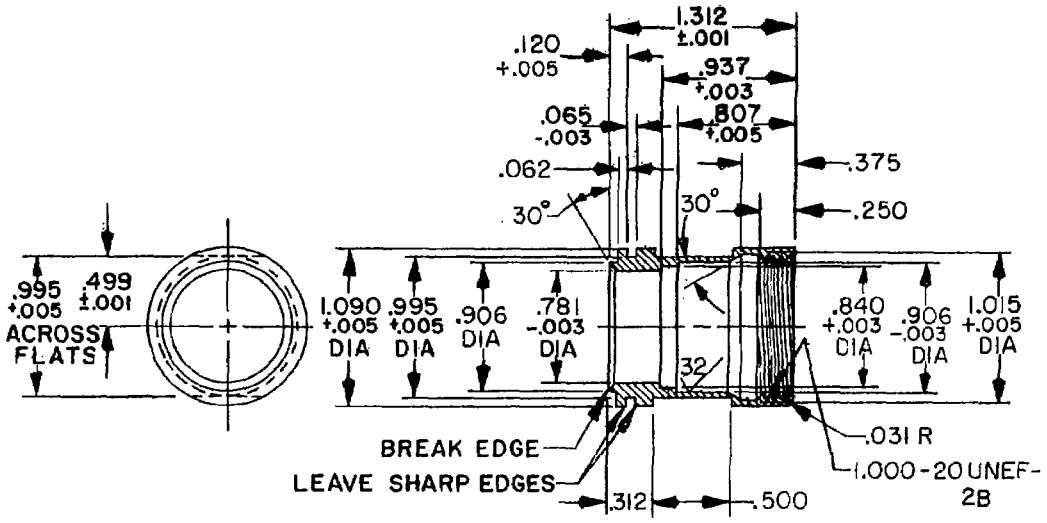

① BODY

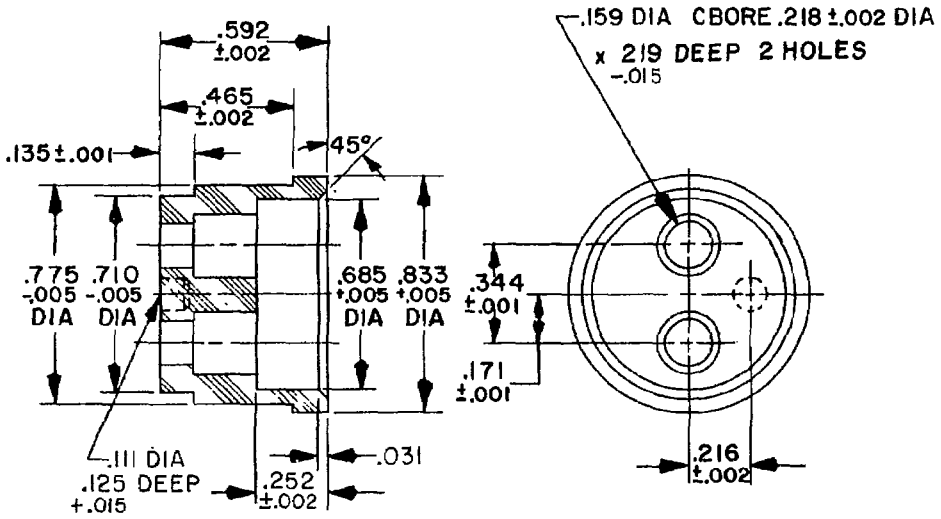

② INSULATOR

FIGURE 1. Type UG-1060A/U electrical plug connector - Continued.

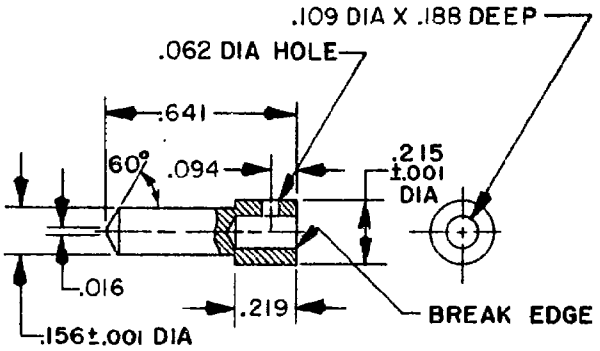

③ CENTER CONTACT

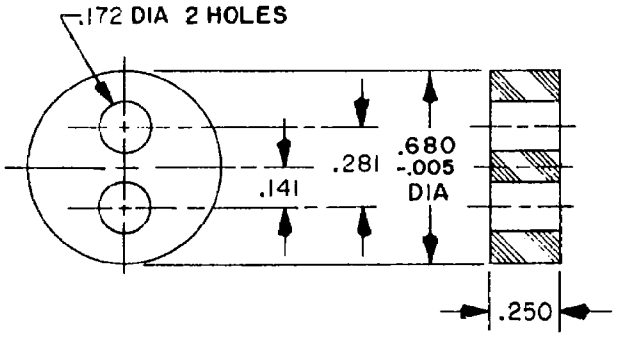

④ INSULATOR

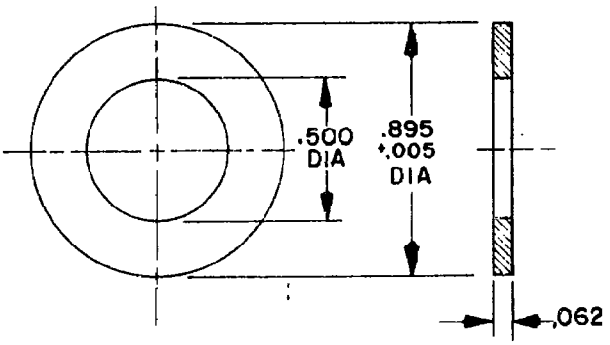

⑤ WASHER

FIGURE 1. Type UG-1060A/U electrical plug connector - Continued.

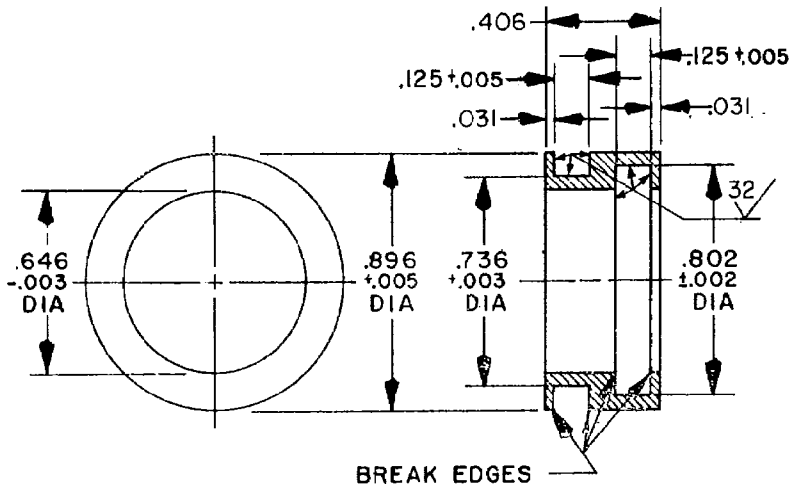

⑥ O-RING ADAPTER

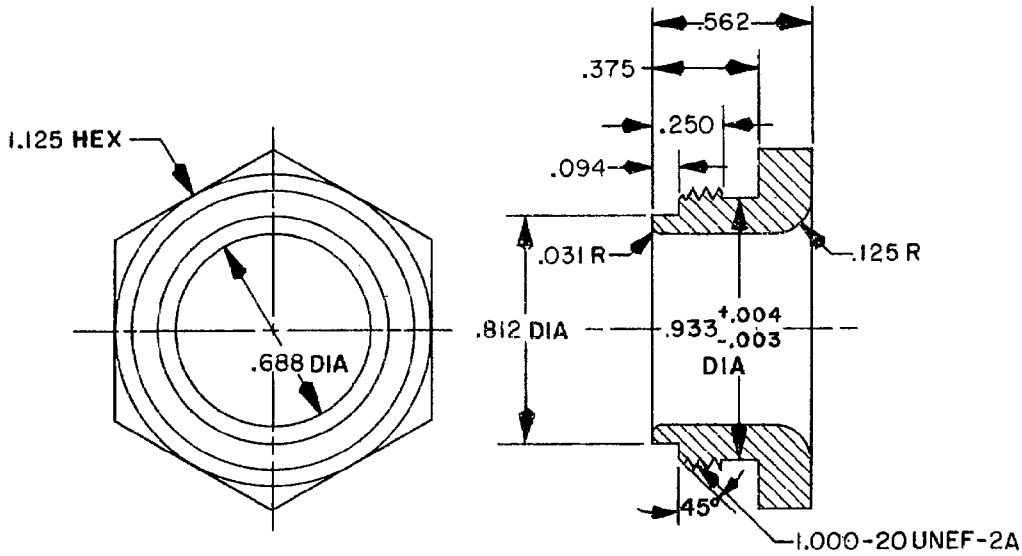

⑦ CABLE CLAMP

FIGURE 1. Type UG-1060A/U electrical plug connector - Continued.

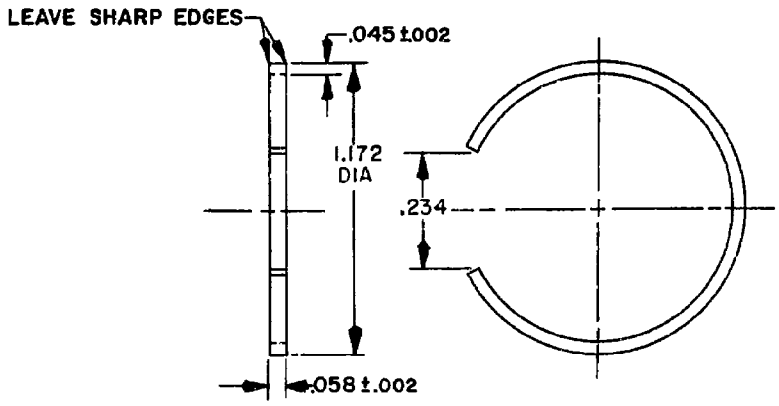

⑧ RETAINING RING

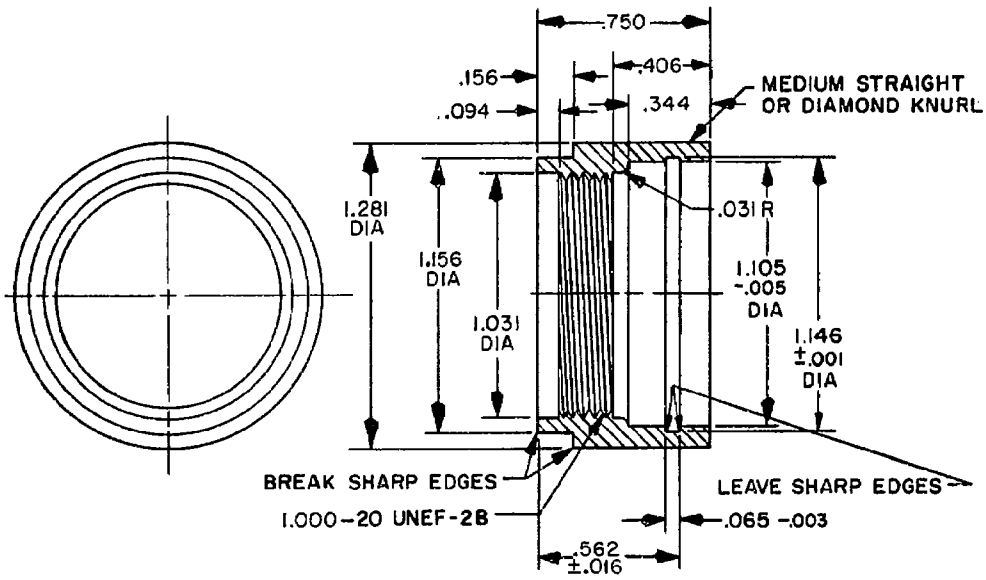

⑨ COUPLING NUT

FIGURE 1. Type UG-1060A/U electrical plug connector - Continued.

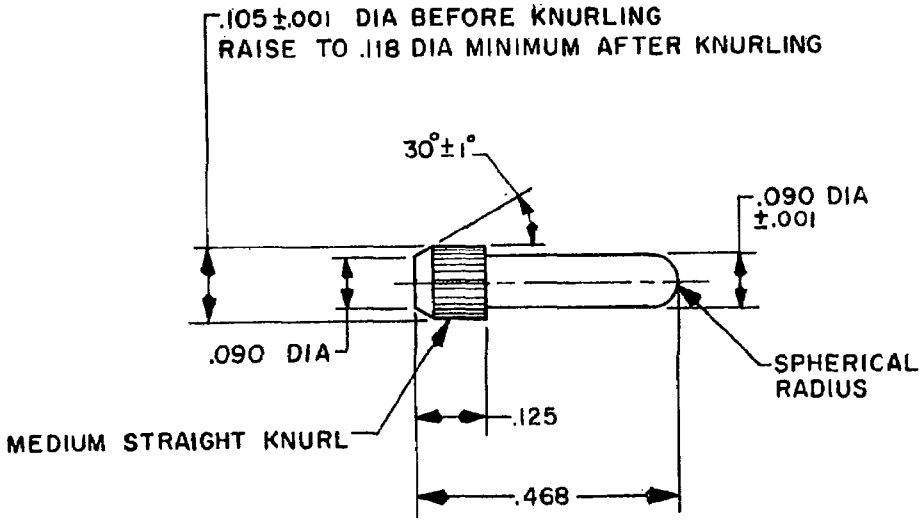

(10) LOCATING PIN

FIGURE 1. Type UG-1060A/U electrical plug connector - Continued.

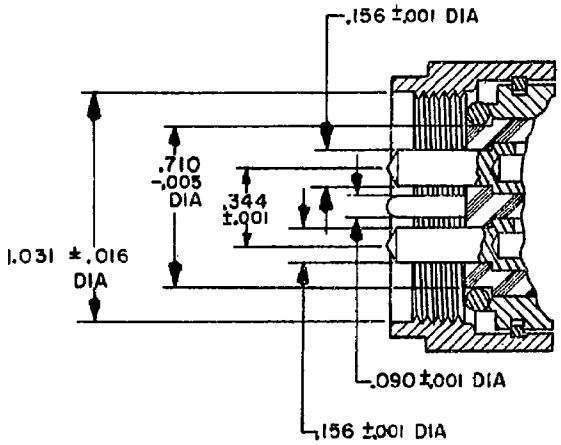

INCHES	MM	INCHES	MM
.001	.03	.156	3.96
.005	.13	.344	8.74
.016	.41	.710	18.03
.090	2.29	1.031	26.19

NOTES:
1. Dimensions are in inches.
2. Metric equivalents are given for general information only and are based upon 1.00 inch = 25.4 mm.

FIGURE 2. Visual mating requirements.

(D) ENGINEERING DATA:

Nominal impedance: 95 ohms.

Frequency range: DC to 500 MHz, maximum.

Voltage rating: 500 volts peak at sea level.

Mating connector: M3655/8-1059.

Intended use: Type M3655/9-1060 electrical connector is designed for use with radio-frequency cable M17/56-RG130.

(D) REQUIREMENTS:

Design and construction: See figures 1 and 2.
Metal parts: All metal parts shall have silver plating of not less than 0.0002 inch thickness and of sufficient smoothness and density to withstand the salt spray (corrosion) test. Silver plating shall be in accordance with QQ-S-365.

Force to engage/disengage:
Torque: Not applicable.
Longitudinal force: Not applicable.

Coupling proof torque: 15 inch-pounds, minimum.

Mating characteristics: Not applicable.

Permeability: Applicable.

Hermetic seal: Not applicable.

Leakage: Not applicable.

Insulation resistance: 5×10^9 ohms, minimum.

Contact insulator captivation: Not applicable.

Salt spray (corrosion): Applicable.

Connector durability: Applicable.

Contact resistance (milliohms, maximum):

	Initial	After environment
Inner conductor contacts:	2.67	3.80
Outer conductor contacts:	.38	Not applicable
Braid to body:	.20	Not applicable

Dielectric withstanding voltage: 1,500 Vrms, minimum, at sea level.

Vibration, high frequency: Applicable.

Shock (specified pulse): Not applicable.

Temperature cycling: Applicable.

Humidity: Applicable, but no measurement shall be made at high humidity. Insulation resistance shall be at least 2×10^8 ohms within 5 minutes after removal from the humidity chamber.

Cable retention force: 75 pounds, minimum.

Coupling nut retention: Applicable.

Marking: In accordance with MIL-C-3655.
Part number: M3655/9-1060.

Qualification: Not required.

Custodians:
Army - CR
Navy - EC
Air Force - 85

Review activities:
Army - MI
Navy - OS
Air Force - 11, 17, 99
DLA - ES

User activities:
Army - AT
Navy - AS, MC, SH
Air Force - 19

Preparing activity:
Army - CR

Agent:
DLA - ES

(Project 5935-3086-9)