MILITARY SPECIFICATION SHEET

SWITCH, ROTARY, OPEN CONSTRUCTION, 1/2 AMPERE,
STYLE SR09

The complete requirements for acquiring the switch described herein shall consist of this specification and the latest issue of MIL-S-3786.

This specification is approved for use by all Departments and Agencies of the Department of Defense.

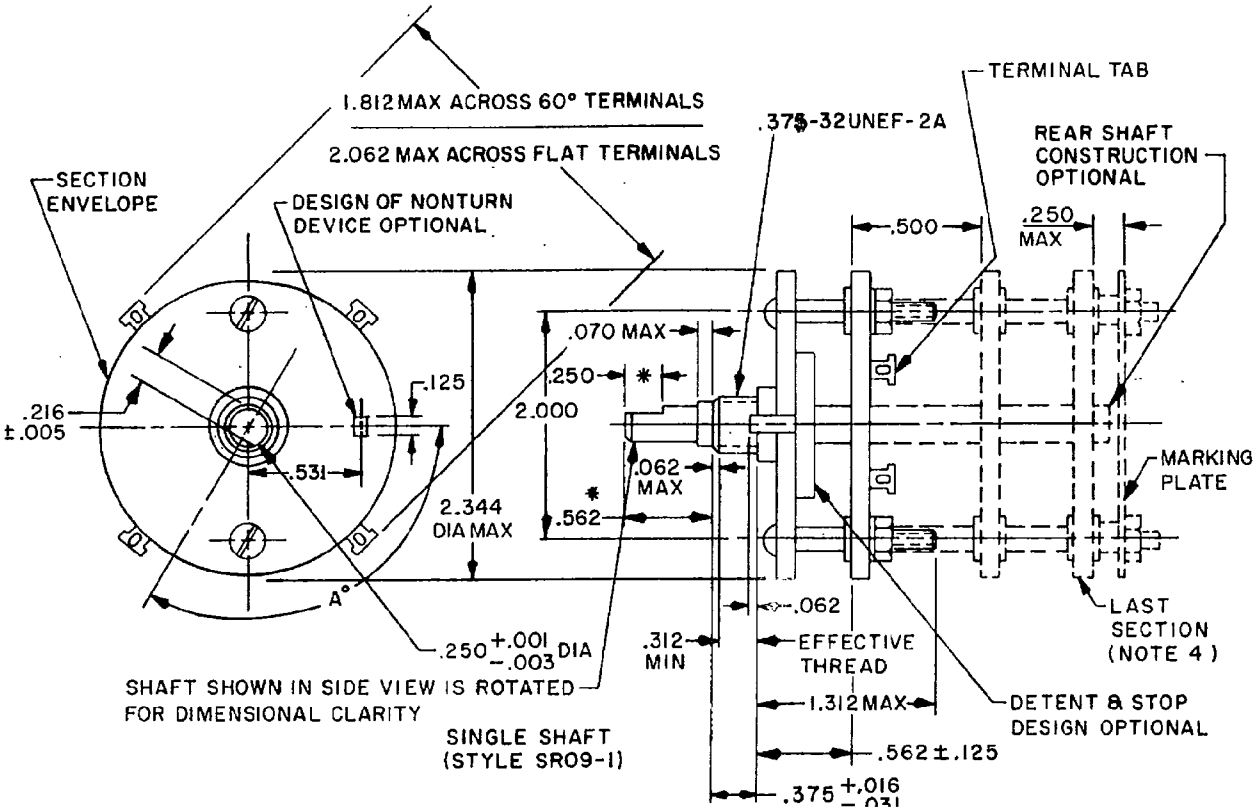

FIGURE 1. Style SR09 switch.

FSC 5930

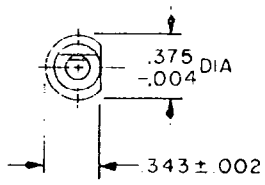

BUSHING FLAT FOR
S CONSTRUCTION

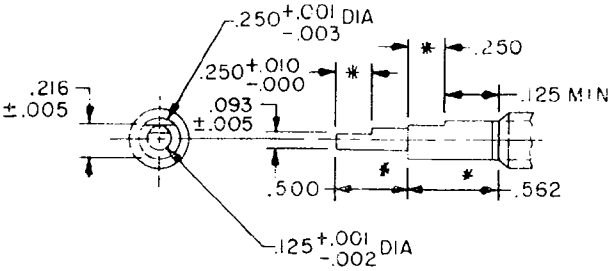

CONCENTRIC SHAFT
(STYLE SR09-2)

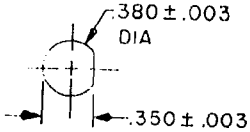

PANEL PIERCING FOR
S CONSTRUCTION

INCHES	MM	INCHES	MM	INCHES	MM
.001	.03	.093	2.36	.500	12.70
.002	.05	.125	3.18	.562	14.27
.003	.08	.216	5.49	1.312	33.32
.005	.13	.250	6.35	1.766	44.86
.010	.25	.312	7.92	1.312	36.02
.016	.41	.350	8.89	2.000	50.80
.031	.79	.355	9.02	2.062	52.39
.062	1.59	.375	9.53	2.344	59.54
.070	1.78	.380	9.65		

NOTES:
1. Dimensions are in inches.
2. Metric equivalents are given for general information only and are based upon 1.00 inch = 25.4 mm.
3. Unless otherwise specified tolerance is ±.015 (0.38 mm).
4. The number of sections is optional.
5. Nonturn device as shown is not applicable to S construction switches.
6. Shaft-flat angle A° is the angle between a line through the center of the shaft and center of the nonturn device, and another line through the center of the shaft and perpendicular to the shaft flat.
7. Shaft shown in maximum counterclockwise position for switches with stop and with switch in position No. 1 for switches without stop.
* 8. For allowable variations, see MIL-S-3786 for ordering data.
9. Front plate design optional provided it falls within the maximum O.D. of the section dimension referenced.

FIGURE 1. Style SR09 switch - Continued.

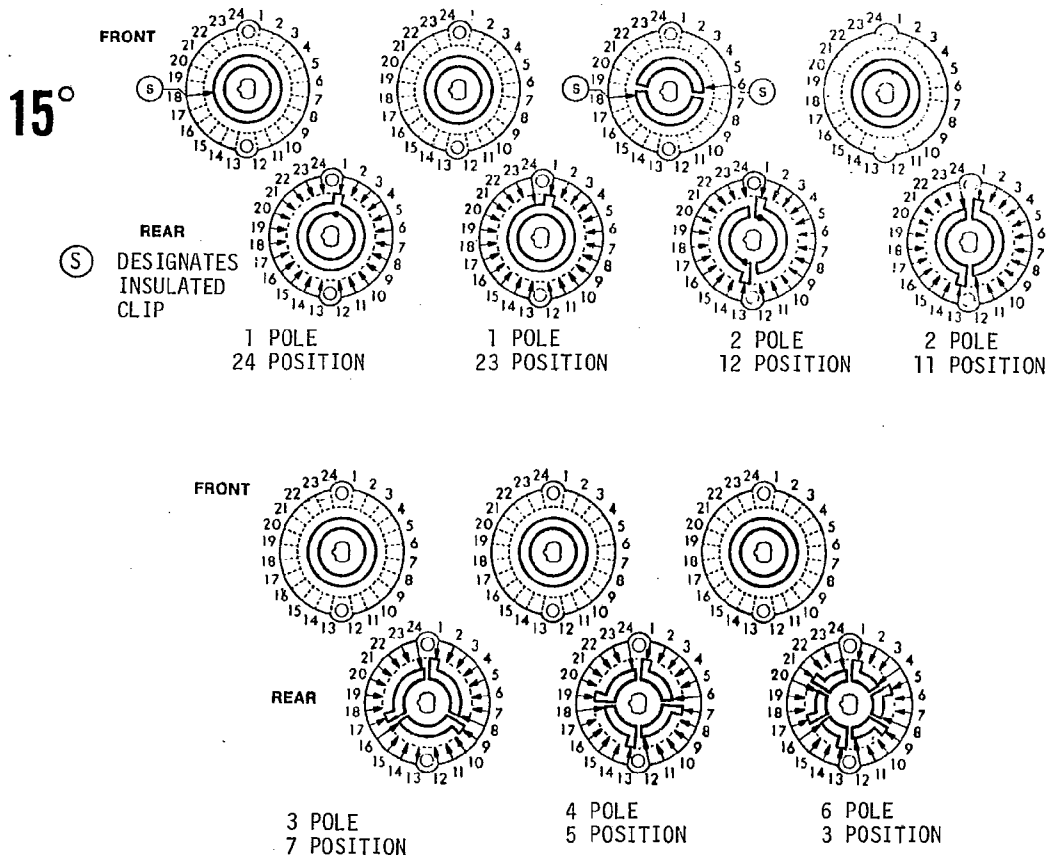

NOTE: On circuits with fewer positions, short clips will be omitted from clockwise end of rotation. Example: 1 pole 22 position would have clip 23 omitted.

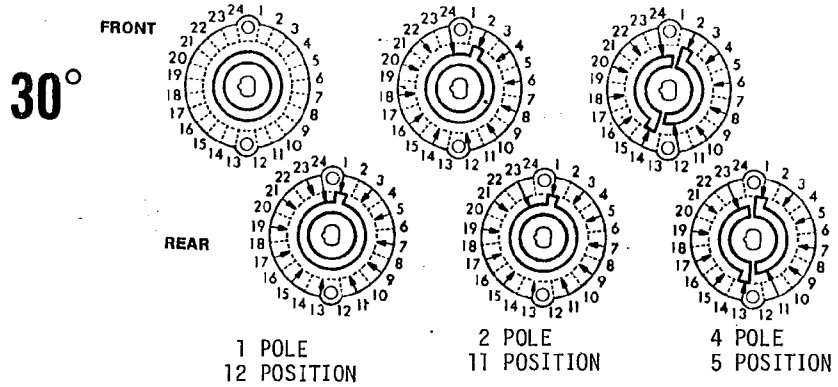

FIGURE 2. Circuit diagrams viewed with switch in extreme counterclockwise position.

REQUIREMENTS:

Dimensions and configuration: See figures 1 and 2.

Angle of throw: 15° and 34° (see table V).

Terminals: The terminals tabs shall be bent at an angle of 60° ±15° from the plane of the section. When flat terminals are required, the dimensions shall be as shown on figure 1.

Rotational torque: The minimum and maximum values of torque determined for shaft rotation shall be within the limits specified in table I.

TABLE I. Rotational-torque limits.

Temperature	Torque (lb-in)	
	Minimum	Maximum
Room	2	6
Minimum	2	8

Construction: N or S.

Life (rotational): The test loads for the applicable circuit conditions shall be as specified in table II. Each of the loads specified for the applicable environmental condition shall be switched by at least one rotor contact of the switch.

TABLE II. Electrical loads.

Environmental condition	Loads			
	Inductive (2.8 henries)		Resistive	
	Milliamperes	Volts, dc	Milliamperes	Volts, dc
At atmospheric pressure	50	28	500 250 50	28 115 V rms 300 V rms
At reduced barometric pressure	---	---	350 100	28 115 V rms

Dielectric withstanding voltage: The applicable test voltage specified in table III shall be applied between the general switch elements.

TABLE III. Dielectric-test voltages.

Altitude	Volts, rms
At atmospheric pressure	1,000
At reduced barometric pressure	400

Mounting hardware: Each switch shall be supplied with one each hexagon nut in accordance with MS25082-20 or equivalent, and one internal-tooth lock washer in accordance with MS35333-42 or equivalent.

Temperature-life characteristic: Symbol B (25,000 cycles, -65°C and +85°C).

Vibration grade: Symbol 1 (10 to 55 Hz).

Shock type: Symbol H (high impact), Symbol M (medium impact).

Insulation material: Symbol P.

Altitude: Symbol C (70,000 feet).

Shock type: See table IV.

Part number: The military part number shall consist of M3786/9- (selected from tables IV through VI) as shown in the follow example (see note):

M3786/9- A 02 01

Construction type, temperature life characteristics, shock type, and insulation material (see table IV).

Poles per deck, number of positions and original angle of throw (see table V).

Number of decks and switching characteristics (see table VI).

NOTE: Part numbers listed are for style SR09-1 switches. M3786/9-A0201 identifies a rotary switch of construction type N, temperature-life characteristic B, shock type H, and plastic insulation material; one pole per deck, two positions per pole, 15° angle of throw; one deck with nonshorting switching characteristic.

TABLE IV. Code letters for combinations of construction type, temperature-life characteristic, shock type, and insulation material.

Code letter	Construction type	Temperature-life characteristics	Shock type	Insulation material
A	N	B	H	P
B	S	"	H	"
C	N	"	M	"
D	S	"	M	"

TABLE V. Code numbers for combinations of poles per deck, number of positions per pole, and angle of throw.

Code number	Poles per deck	Number of positions	Angle of throw
01	1	2	15°
02	"	3	"
03	"	4	"
04	"	5	"
05	"	6	"
06	"	7	"
07	"	8	"
08	"	9	"
09	"	10	"
10	"	11	"
11	"	12	"
12	"	13	"
13	"	14	"
14	"	15	"
15	"	16	"
16	"	17	"
17	"	18	"
18	"	19	"
19	"	20	"
20	"	21	"
21	"	22	"
22	"	23	"
23	"	24 1/	"
24	2	2	"
25	"	3	"
26	"	4	"
27	"	5	"
28	"	6	"
29	"	7	"
30	"	8	"
31	"	9	"
32	"	10	"
33	"	11	"
34	"	12	"
35	3	2	"
36	"	3	"
37	"	4	"
38	"	5	"
39	"	6	"
40	"	7	"
41	4	2	"
42	"	3	"
43	"	4	"
44	"	5	"
45	6	2	"
46	6	3	"
47	1	2	30°
48	"	3	"
49	"	4	"
50	"	5	"
51	"	6	"
52	"	7	"
53	"	8	"
54	"	9	"

See footnote at end of table.

TABLE V. Code numbers for combinations of poles per deck, number of positions per pole, and angle of throw - Continued.

Code number	Poles per deck	Number of positions	Angle of throw
55	1	10	30°
56	"	11	"
57	"	12 1/	"
58	2	2	"
59	"	3	"
60	"	4	"
61	"	5	"
62	"	6	"
63	"	7	"
64	"	8	"
65	"	9	"
66	"	10	"
67	"	11	"
68	4	2	"
69	"	3	"
70	"	4	"
71	"	5	"

1/ Switch is continuous rotation type (no stops), and number of positions is dependent on angle of throw as follows:

Angle of throw	Positions
15°	24
30°	12

TABLE VI. Code numbers for combinations of number of decks and switching characteristics.

Code number	Number of decks	First deck	Second deck	Third deck	Fourth deck	Fifth deck	Sixth deck	Seventh deck	Eigth
01	1	NS							
02	"	S							
03	2	NS	NS						
04	"	S	S						
05	"	NS	S						
06	3	NS	NS	NS					
07	"	S	S	S					
08	"	NS	NS	S					
09	"	NS	S	S					
10	4	NS	NS	NS	NS				
11	"	S	S	S	S				
12	"	NS	NS	NS	S				
13	"	NS	S	S	S				
14	"	NS	NS	S	S				
15	5	NS	NS	NS	NS	NS			
16	"	S	S	S	S	S			
17	"	NS	NS	NS	NS	S			
18	"	NS	S	S	S	S			
19	"	NS	NS	NS	S	S			
20	"	NS	NS	S	S	S			
21	6	NS	NS	NS	NS	NS	NS		
22	"	S	S	S	S	S	S		
23	"	NS	NS	NS	NS	NS	S		
24	"	NS	NS	NS	NS	S	S		
25	"	NS	NS	NS	S	S	S		
26	"	NS	NS	S	S	S	S		
27	"	NS	S	S	S	S	S		
28	7	NS	NS	NS	NS	NS	NS	NS	
29	"	S	S	S	S	S	S	S	
30	"	NS	NS	NS	NS	NS	NS	S	
31	"	NS	NS	NS	NS	NS	S	S	
32	"	NS	NS	NS	NS	S	S	S	
33	"	NS	NS	NS	S	S	S	S	
34	"	NS	NS	S	S	S	S	S	
35	"	NS	S	S	S	S	S	S	
36	8	NS	NS	NS	NS	NS	NS	NS	NS
37	"	S	S	S	S	S	S	S	S
38	"	NS	NS	NS	NS	NS	NS	NS	S
39	"	NS	NS	NS	NS	NS	NS	S	S
40	"	NS	NS	NS	NS	NS	S	S	S
41	"	NS	NS	NS	NS	S	S	S	S
42	"	NS	NS	NS	S	S	S	S	S
43	"	NS	NS	S	S	S	S	S	S
44	"	NS	S	S	S	S	S	S	S

Revision letters are not used to denote changes due to the extensiveness of the changes.

Custodians:
Army - ER
Navy - EC
Air Force - 85

Review activities:
Army - MI
Navy - AS, OS
Air Force - 11, 17, 99
DLA - ES

User activities:
Army - ME, AT, AV, SM
Navy - MC, CG
Air Force - 19

Agent:
DLA - ES

Preparing activity:
Air Force - 85
(Project 5930-1243-4)