This standard has been approved by the ASD Department of the Air Force and is mandatory for use by that activity. All other military activities are required to employ this standard where suitable

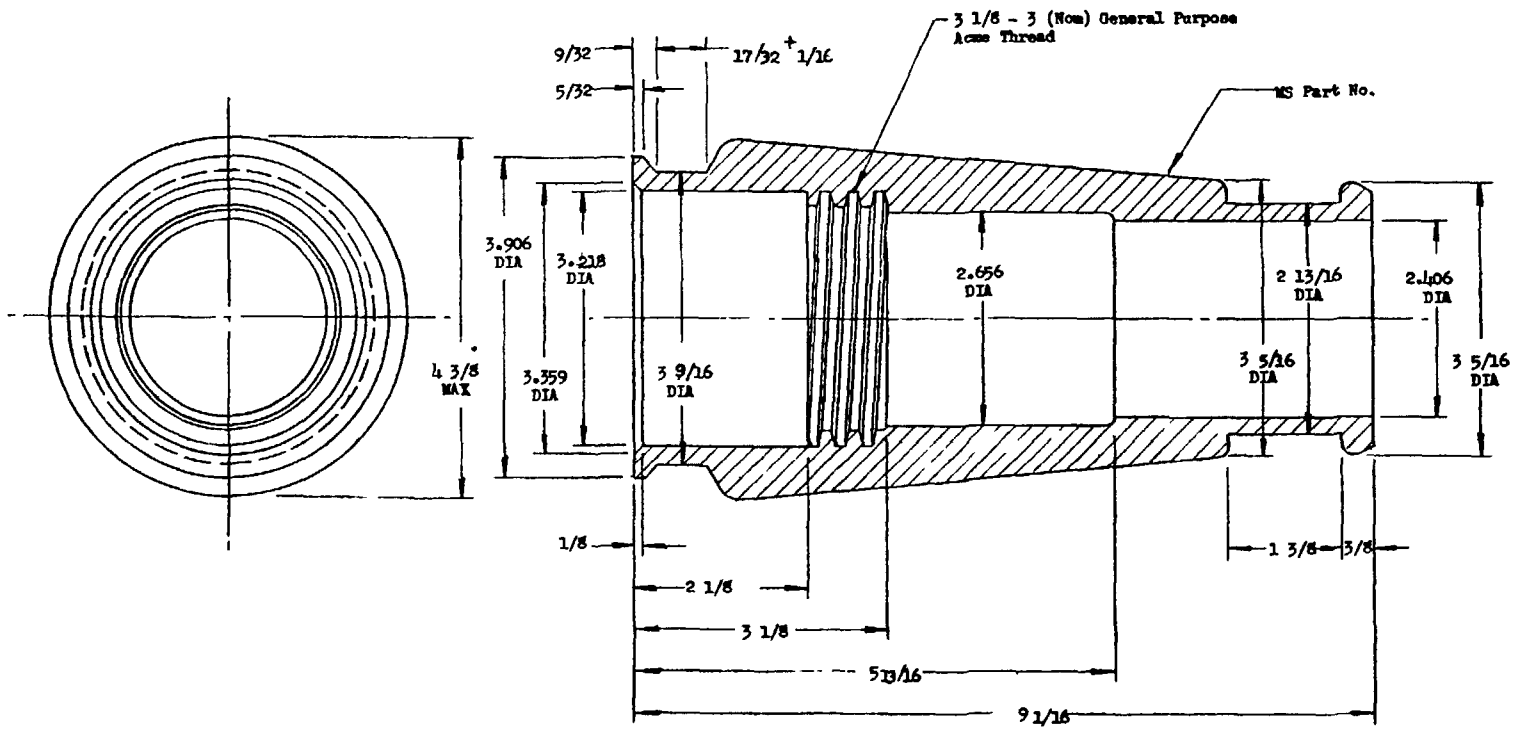

MS Part No
MS27267-1

NOTES

1. Material: - See Procurement Specification
2. Remove All Sharp Edges
3. Unless Otherwise Specified, Dimensions in Inches
4. Tolerances On Fractions ±1/16, Decimals ±.015
5. For Design Feature Purposes This Standard Takes Precedence Over Procurement Documents Referenced Herein
6. Referenced Documents Shall Be Of The Issue In Effect On Date Of Invitation For Bid

FED SUP CLASS 5935

APPROVED 7 October 1963 REVISED

MILITARY STANDARD

MS 27267 (USAF)

SHEET 1 OF 1

TITLE: SHELL, ELECTRICAL CONNECTOR - RAMP POWER, 115/240 VOLTS

SUPERSEDES

PROCUREMENT SPECIFICATION: MIL-C-38150

P A: Other Cust

DD FORM 1 SEP 57 672-1 (Limited coordination)

PREVIOUS EDITIONS OF THIS FORM ARE OBSOLETE