FED. SUP CLASS
5935

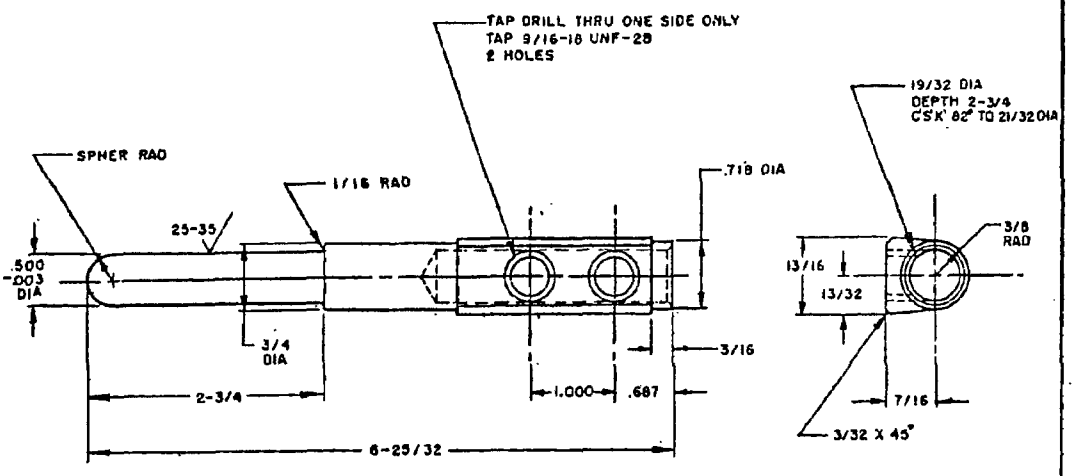

PART NO.
MS27268-1

1. MATERIAL: COPPER ALLOY-SEE PROCUREMENT SPECIFICATION
2. FINISH: SEE PROCUREMENT SPECIFICATION
3. (8) UNLESS OTHERWISE SPECIFIED, MACHINED SURFACES 125/OR BETTER PER ANSI B46.1 1962
4. REMOVE ALL BURRS AND BREAK SHARP EDGES
5. ALL DIMENSIONS SHOWN ARE FOR FINISHED PART AFTER PLATING
6. DIMENSIONS IN INCHES, UNLESS OTHERWISE SPECIFIED, TOLERANCES ON FRACTIONS ±1/64, DECIMALS ±0.005
7. ALL DIAMETERS MUST BE CONCENTRIC TO EACH OTHER WITHIN 0.004 TIR

(8) REACTIVATED AFTER 8 MARCH 1974. USE WITH MS27266.

FOR DESIGN FEATURE PURPOSES, THIS STANDARD TAKES PRECEDENCE OVER PROCUREMENT DOCUMENTS REFERENCED HEREIN. REFERENCED DOCUMENTS SHALL BE OF THE ISSUE IN EFFECT ON DATE OF INVITATIONS FOR BID

APPROVED 7 Oct 63 REVISED (A) 17 Jul 67 (B) 8 Mar 74

Reviewer: Air Force-85

This military standard is approved for use by all Departments and Agencies of the Department of Defense. Selection for all new engineering and design applications and for repetitive use shall be made from this document.

P.A. Air Force-11 Other Cust	TITLE CONTACT, ELECTRICAL-PLUG CONNECTOR, RAMP POWER, 416/240 VOLTS, LARGE, MALE	MILITARY STANDARD MS27268(USAF)
PROCUREMENT SPECIFICATION MIL-C-38159	SUPERSEDES	SHEET 1 OF 1

DD FORM 1 NOV 65 672-1 (Limited coordination)