FED SUP CLASS
5935

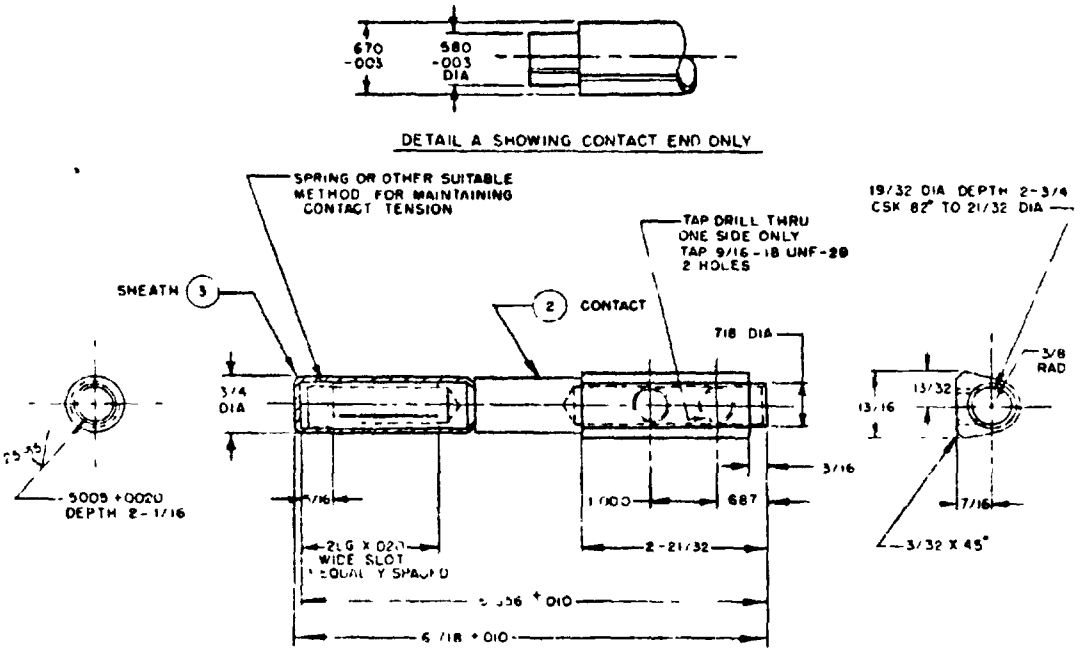

PART NO
MS27283-1

1 MATERIAL 2 COPPER ALLOY - SEE PROCUREMENT SPECIFICATION
2 FINISH SEE PROCUREMENT SPECIFICATION
(B) 3 UNLESS OTHERWISE SPECIFIED MACHINED SURFACES 125 OR BETTER PER ANSI B46 1 1962
4 REMOVE ALL BURRS AND BREAK SHARP EDGES
ALL DIMENSIONS SHOWN ARE FOR FINISHED PART AFTER PLATING
6 DIMENSIONS IN INCHES, UNLESS OTHERWISE SPECIFIED TOLERANCES ON FRACTIONS ±1/64, DECIMALS ±0 005
7 ALL DIAMETERS MUST BE CO CENTRIC TO EACH OTHER WITHIN 0 004 TIR

(9) REACTIVATED AFTER 8 MARCH 1974 USE WITH MS27282

FOR DESIGN FEATURE PURPOSES THIS STANDARD TAKES PRECEDENCE OVER PROCUREMENT DOCUMENTS REFERENCED HEREIN
REFERENCED DOCUMENTS SHALL BE OF THE ISSUE IN EFFECT ON DATE OF INVITATIONS FOR BID

APPROVED 7 Oct 63 REVISED (A) 17 Jul 67 (B) 8 Mar 74

P A Air Force - 11 Other Cust	TITLE CONTACT, ELECTRICAL PLUG CONNECTOR, RAMP POWER 416/240 VOLTS LARGE FEMALE	MILITARY STANDARD MS27283(USAF)
DOCUMENT SPECIFICATION MIL-C-38159	SUPERSEDES	SHEET OF

DD FORM 672-1 (Limited coordination)