MILITARY SPECIFICATION

LINES, RADIO FREQUENCY TRANSMISSION

(COAXIAL, AIR DIELECTRIC), 50 OHM

This specification is approved for use by all Departments and Agencies of the Department of Defense.

The complete requirements for procuring transmission lines, described herein shall consist of this docuemnt and the latest issue,of Specification MIL-L-3890.

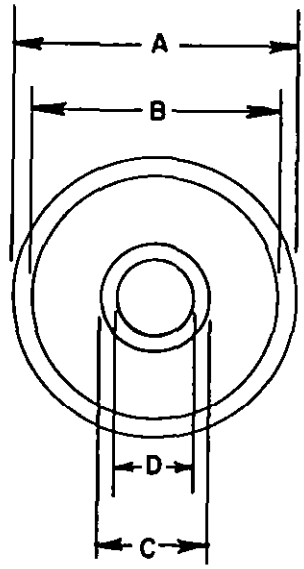

NOTES:
1. Dimensions are in inches.
2. Metric equivalents are in parentheses.
3. Metric equivalents (to the nearest .01 mm) are given for general information only and are based upon 1 inch = 25.4 mm.

FIGURE 1. Transmission line.

FSC 5985

TABLE I. Dash numbers and dimensions.

Dash number	Line size	Outer conductor					Inner conductor				
		Mat'l.	Dia		Wall thickness 1/		Mat'l.	Dia		Wall thickness 1/	
			A	B	Nom	Max deviation from average 2/		C	D	Nom	Max deviation from average 2/
01 ___	6.125 (155.58)	AL	6.125 (155.58) ±0.008 (.20)	5.981 (151.92) ±0.008 (.20)	0.072 (1.83)	0.012 (.30)	CU	2.600 (66.04) ±0.004 (.10)	2.520 (64.01) ±0.004 (.10)	0.040 (1.02)	0.0075 (.19)
02 ___		CU									
03 ___	3.125 (79.38)	AL	3.125 (79.38) ±0.005 (.13)	3.027 (76.89) ±0.005 (.13)	0.049 (1.24)	0.0075 (.19)		1.315 (33.40) ±0.003 (.08)	1.231 (31.27) ±0.003 (.08)	0.042 (1.07)	0.005 (.13)
04 ___		CU									
05 ___	1.625 (41.28)	AL	1.625 (41.28) ±0.003 (.08)	1.527 (38.79) ±0.003 (.08)	0.049 (1.24)	0.005 (.13)		0.6640 (16.87) ±0.0025 (.06)	0.5880 (14.94) ±0.0025 (.06)	0.038 (.97)	0.005 (.13)
06 ___		CU									
07 ___	0.875 (22.23)	AL	0.8750 (22.23) ±0.0025 (.06)	0.7850 (19.94) ±0.0025 (.06)	0.045 (1.14)	0.005 (.13)		0.341 (8.66) ±0.002 (.05)	0.291 (7.39) ±0.002 (.05)	0.025 (.64)	0.003 (.08)
08 ___		CU									
09 ___	0.375 (9.53)	AL	0.375 (9.53) ±0.002 (.05)	0.285 (7.24) ±0.002 (.05)	0.045 (1.14)	0.0045 (.11)		0.125 (3.18) ±0.002 (.05)	---	---	---
10 ___		CU					CU				

1/ Average wall thickness is one-half the difference between the corresponding inside and outside diameters at any cross section perpendicular to the axis, and measured arbitrarily at any point on the periphery.

2/ Maximum deviation of the wall thickness from the average wall thickness (eccentricity) at any cross section is the difference between the average wall thickness and either the maximum or minimum wall thickness, whichever is greater.

TABLE II. Electrical characteristics.

Dash number	Mat'l	Line size	Operating frequency range	Characteristic impedance	Dielectric withstanding voltage	Attenuation dB/100 ft						
						10 MHz	100 MHz	500 MHz	1,000 MHz	2,000 MHz	4,000 MHz	10 GHz
				Ohms	kV(rms)							
01___	AL	6.125	.5 MHz - .65 GHz	50 $^{+.15}_{-.18}$	40.0	0.18	0.56	.16	---	---	---	---
02___	CU					0.17	0.54	.15	---	---	---	---
03___	AL	3.125	.5 MHz - 1.3 GHz	50 $^{+.26}_{-.27}$	20.0	.037	.121	.27	.41	---	---	---
04___	CU					.036	.115	.26	.39	---	---	---
05___	AL	1.625	.5 MHz - 2.7 GHz	50 $^{+.31}_{-.36}$	10.0	.064	.22	.53	.75	1.10	---	---
06___	CU					.061	.21	.50	.71	1.05	---	---
07___	AL	.875	.5 MHz - 3.3 GHz	50 $^{+.57}_{-.52}$	5.0	.143	.46	1.08	1.65	2.43	3.64	---
08___	CU					.136	.44	1.03	1.58	2.31	3.46	---
09___	AL	.375	.5 MHz - 10 GHz	50 $^{+.07}_{-.73}$	0.5	---	---	---	---	---	---	16.54
10___	CU					---	---	---	---	---	---	15.75

REQUIREMENTS:

Design, construction, and physical dimensions: See figure 1 and table I.

Operating frequency range: See table II.

Attenuation: See table II.

Voltage standing wave ratio (VSWR): 1.10:1.

Characteristic impedance: See table II.

Velocity of propagation: 99.7 percent minimum.

Dielectric withstanding voltage: See table II.

Pressurization:
Test: 30 lb_f/in^2 $^{+2}_{-0}$ guage.

Operating: 20 lb_f/in^2 ±2 guage.

Part number: M3890/1- (and dash number from table I).

Example: M 3890/2 -01 010

Military designator — M
Specification sheet number — 3890/2
Dash number — -01
Length in inches — 010

TABLE III. Cross reference.

Part number M3890/1-	Aluminum	Copper
01- - -	-	
02- - -		RG-152/U
03- - -	-	
04- - -		RG-154/U
05- - -	RG-382/U	
06- - -		RG-153/U
07- - -	-	
08- - -		RG-155/U
09- - -	-	
10- - -		RG-151/U

Custodians:
Army - EL
Navy - EC
Air Force - 85

Review activities:
Army - MU, MI, SG, ME
Navy - OS
Air Force - 11, 17
DSA - ES

User activities:
Army - AT, WC
Navy - MC, SH, AS
Air Force - 19

Preparing activity:
Navy - EC

Agent:
DSA - ES

(Project 5985-0815-1)