DEFENSE LOGISTICS AGENCY
DEFENSE SUPPLY CENTER, COLUMBUS
POST OFFICE BOX 3990
COLUMBUS, OH 43216-5000

IN REPLY REFER TO DSCC-VAI (Mr. Abdouni/614-692-0565) August 16, 2004

MEMORANDUM FOR MILITARY/INDUSTRY DISTRIBUTION

SUBJECT: Initial draft of MIL-DTL-38999/60 and /61. Connectors, Electrical, Circular, Crimp Removable Contacts, Fiber Optic Termini. Project number 5935-4768 and 5935-4769.

This letter is an initial draft notice with attached new documents. These documents are being created to include additional fiber optic requirements for the Navy F-18 program.

The initial draft of this document is available for downloading from our web site at:

http://www.dscc.dla.mil/programs/milspec

This draft is in the PDF format and requires Adobe Acrobat Reader to view and print it. If you do not have access to the Internet or otherwise are having trouble downloading this file, please contact us and we will provide you with a hard copy.

If this document is of interest to you, please submit your comments with justification, in electronic format only. Your comments should be received at our office within 45 days of the date of this letter. Any further coordination concerning this document will be circulated only to organizations and firms that furnish comments or reply that they have an interest.

If you require further information, please contact Mr. Abdo Abdouni at: 614-692-0565, fax: 614-692-6939 or e-mail: abdo.abdouni@dla.mil.

Sincerely,

/signed/

RICHARD L TAYLOR
Chief
Interconnection Devices Team

Federal Recycling Program Printed on Recycled Paper

Note: This draft, dated 13 August 2004 prepared by DLA-CC, has not been approved and is subject to modification.
DO NOT USE PRIOR TO APPROVAL.
Project 5935–4768.

METRIC

MIL-DTL-38999/60
NOT DATED

DETAIL SPECIFICATION SHEET

CONNECTORS, ELECTRICAL, PLUG, CIRCULAR, THREADED, STRAIGHT, REMOVABLE CRIMP CONTACTS, FIBER OPTIC TERMINI, TIGHT TOLERANCE, SERIES III, SHELL SIZE 25, METRIC

This specification is approved for use by all Departments and Agencies of the Department of Defense.

The requirements for acquiring the product described herein shall consist of this specification and MIL-DTL-38999.

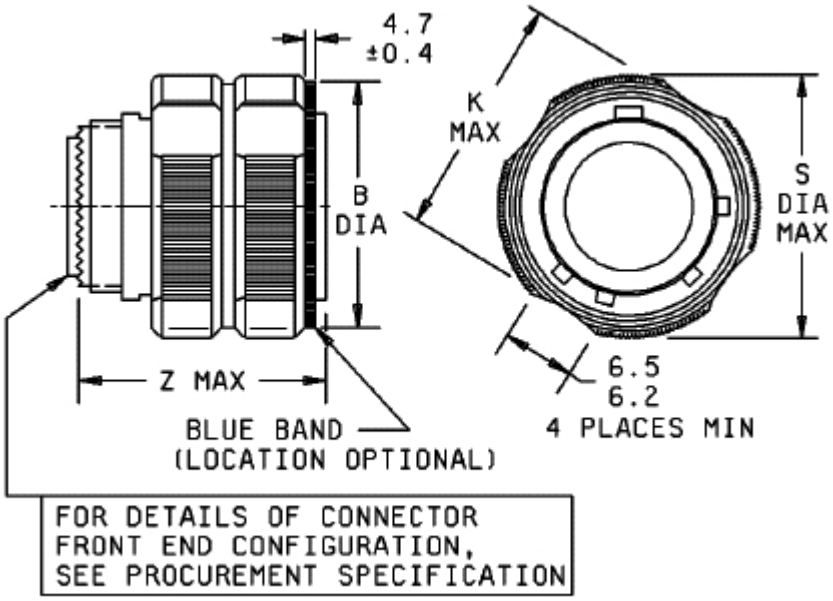

FIGURE 1. Plug, fiber optic.

Dimensions					
Shell size	Shell size code	B dia + .2 - .0	K max	S dia max	Z max
25	J	44.3	44.9	48.0	31.0

NOTE: Dimensions are in millimeters.

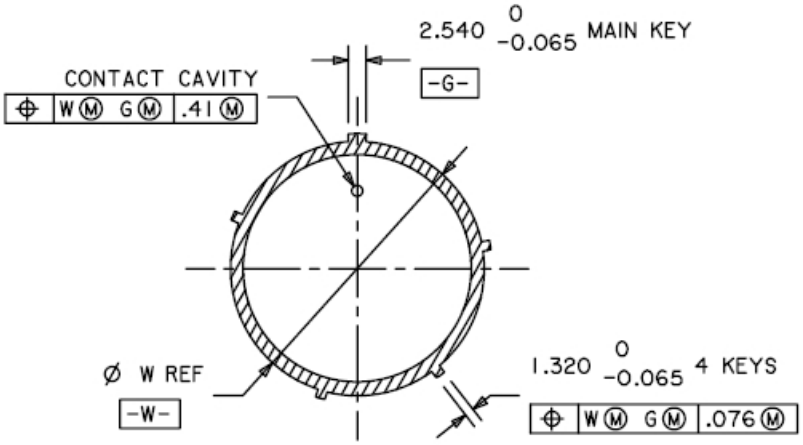

Keying dimensions

FIGURE 1. Plug, fiber optic - Continued.

REQUIREMENTS:

Dimensions and configuration: See figure 1.

Interface dimensions shall conform to MIL-DTL-38999.

The connectors described by this slash sheet shall meet all applicable requirements of MIL-DTL-38999.

The connectors described by this slash sheet are non-plated stainless steel connectors.

This connector mates with MIL-DTL-38999/61.

Insert arrangements shall be in accordance with MIL-STD-1560.

Connector accessories shall be in accordance with SAE-AS85049.

Fiber optic termini shall be in accordance with MIL-PRF-29504/4 and /5.

Electrical contacts shall be in accordance with MIL-C-39029.

Keying dimensions for shell sizes 9 through 23 shall be in accordance with MIL-DTL-38999. Shell size 25 keying dimensions shall be in accordance with figure 1.

Coupling torque shall be in accordance with MIL-DTL-38999 for series III, except that it shall not exceed 130 pound-force inch (14.69 Newtons-meter) when all size 16 cavities are filled with MIL-PRF-29504/4 and /5 termini.

Firewall barrier requirements are not applicable for these connectors.

Qualifications: The connectors described by this slash sheet shall meet the applicable qualification requirements of MIL-DTL-38999 series III, except all size 16 cavities shall be filled with fiber optic termini.

For groups A & B conformance inspections, the high precision dimensions shall be inspected 100% or verified during in-process inspections.

The connectors described by this slash sheet shall be supplied without electrical contacts or fiber optic termini. The design shall specifiy the contacts and termini separately.

Part or Identifying Number (PIN) example (M38999/60KJ29BN):

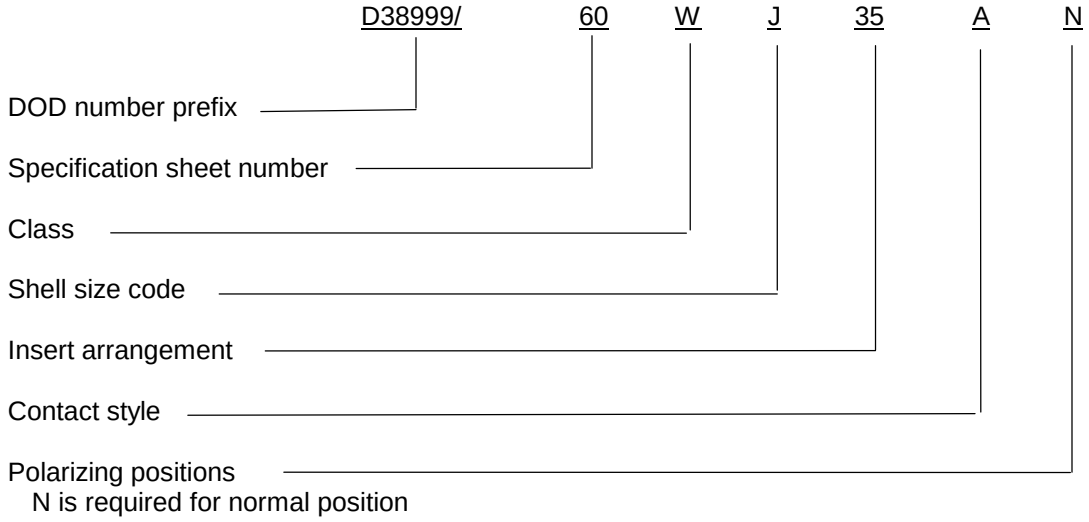

Changes from previous issue. Marginal notations are not used in this revision to identify changes with respect to the previous issue due to the extent of the changes.

Reference documents. This document references the following:

MIL-DTL-38999
MIL-DTL-38999/TB
MIL-STD-1560
MIL-PRF-29504/4
MIL-PRF-29504/5
SAE-AS85049

CONCLUDING MATERIAL

Custodians:
Army – CR
Navy – AS
Air Force – 11
DLA – CC

Preparing activity:
DLA – CC

(Project 5935-4768)

Review activities:
Army – AR, MI
Navy – EC, MC, OS
Air Force – 19, 99

NOTE: The activities listed above were interested in this document as of the date of this document. Since organizations and responsibilities can change, you should verify the currency of the information above using the ASSIST Online database at http://www.dodssp.daps.mil.

Note: This draft, dated 13 August 2004 prepared by DLA-CC, has not been approved and is subject to modification.
DO NOT USE PRIOR TO APPROVAL.
Project 5935–4769.

METRIC

MIL-DTL-38999/61
NOT DATED

DETAIL SPECIFICATION SHEET

CONNECTORS, ELECTRICAL, CIRCULAR, RECEPTACLE, THREADED, WALL MOUNTING FLANGE, REMOVABLE CRIMP CONTACTS , FIBER OPTIC TERMINI, TIGHT TOLERANCE, SERIES III, SHELL SIZE 25, METRIC

This specification is approved for use by all Departments and Agencies of the Department of Defense.

The requirements for acquiring the product described herein shall consist of this specification and MIL-DTL-38999.

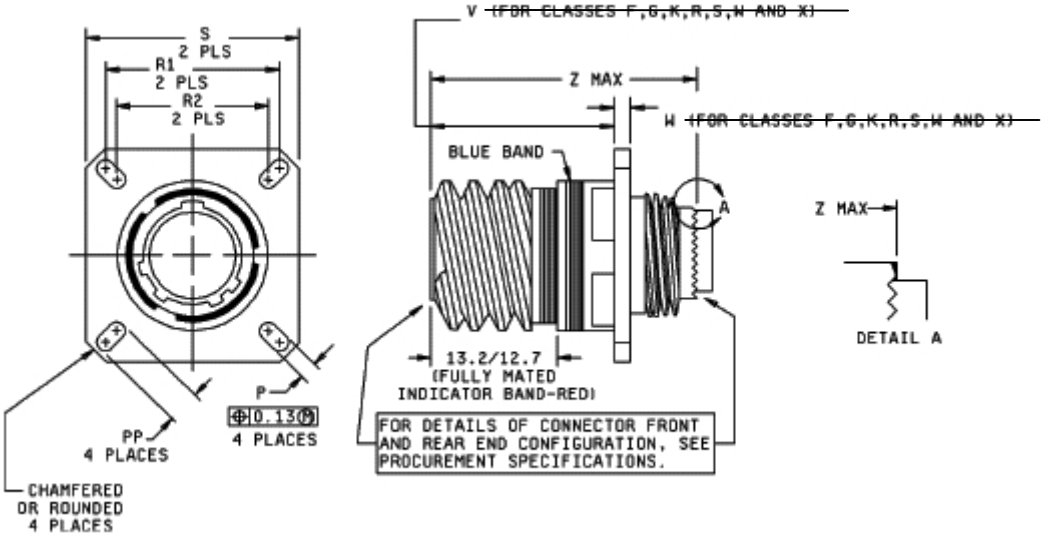

FIGURE 1. Receptacle, fiber otpic.

Dimensions						
Shell size	Shell size code	P ± 0.20	PP ± 0.20	R1 (see note 2)	R2 (see note 3)	S ± 0.3
25	J	3.91	6.15	38.10	34.93	46.0

Dimensions				
Shell size	Shell size code	V + 0.00 - 0.13	W	Z max
25	J	20.07	3.2/2.1	31.5

NOTES:
1. Dimensions are in millimeters.
2. Front or rear panel mounting
3. Front panel mounting only.

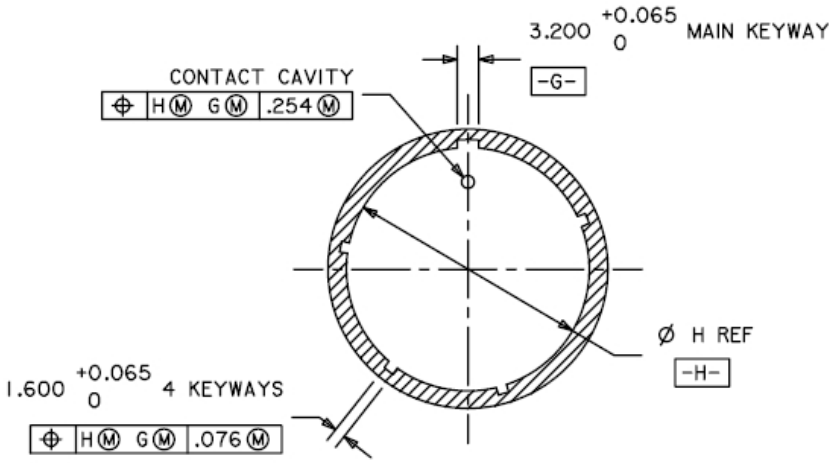

keying dimensions

FIGURE 1. Receptacle, fiber optic – Continued.

REQUIREMENTS:

Dimensions and configuration: See figure 1.

Interface dimensions shall conform to MIL-DTL-38999.

The connectors described by this slash sheet shall meet all applicable requirements of MIL-DTL-38999.

The connectors described by this slash sheet are non-plated stainless steel connectors.

This connector mates with MIL-DTL-38999/60.

Insert arrangements shall be in accordance with MIL-STD-1560.

Connector accessories shall be in accordance with SAE-AS85049.

Fiber Optic Termini shall be in accordance with MIL-PRF-29504/4 and /5.

Electrical contacts shall be in accordance with MIL-C-39029.

Keying dimensions for shell sizes 9 through 23 shall be in accordance with MIL-DTL-38999. Shell size 25 keying dimensions shall be in accordance with figure 1.

Coupling torque shall be in accordance with MIL-DTL-38999 for series III, except that it shall not exceed 130 pound-force inch (14.69 Newtons-meter) when all size 16 cavities are filled with MIL-PRF-29504/4 and /5 termini.

Firewall barrier requirements are not applicable for these connectors.

Qualifications: The connectors described by this slash sheet shall meet the applicable qualification requirements of MIL-DTL-38999 series III, except all size 16 cavities shall be filled with fiber optic termini.

For groups A & B conformance inspections, the high precision dimensions shall be inspected 100% or verified during in-process inspections.

The connectors described by this slash sheet shall be supplied without electrical contacts or fiber optic termini. The design shall specifiy the contacts and termini separately.

Part or Identifying Number (PIN) example (M38999/61LJ29BN):

M38999/	61	W	J	35	A	N

DoD number prefix

Specification sheet number

Class

Shell size code

Insert arrangement

Contact style

Polarizing positions
N is required for normal position

NOTE: The term PIN is equivalent to the term (part number, identification number, and type designator) which was previously used in this specification.

Reference documents. This document references the following:

MIL-DTL-38999
MIL-DTL-38999/TA
MIL-STD-1560
MIL-PRF-29504/4
MIL-PRF-29504/5
SAE-AS85049

CONCLUDING MATERIAL

Custodians:
Army – CR
Navy – AS
Air Force – 11
DLA – CC

Review activities:
Army – AR, MI
Navy – EC, MC, OS
Air Force – 19, 99

Preparing activity:
DLA – CC

(Project 5935-4769)

NOTE: The activities listed above were interested in this document as of the date of this document. Since organizations and responsibilities can change, you should verify the currency of the information above using the ASSIST Online database at http://www.dodssp.daps.mil.