INCH-POUND

MIL-DTL-3922/52C
6 March 2000
SUPERSEDING
MIL-F-3922/52B
4 May 1976

DETAIL SPECIFICATION SHEET

FLANGES, WAVEGUIDE (PRESSURIZABLE CONTACT)

This specification is approved for use by all Departments and Agencies of the Department of Defense.

The requirements for acquiring the flanges described herein shall consist of this document and the latest issue of MIL-DTL-3922.

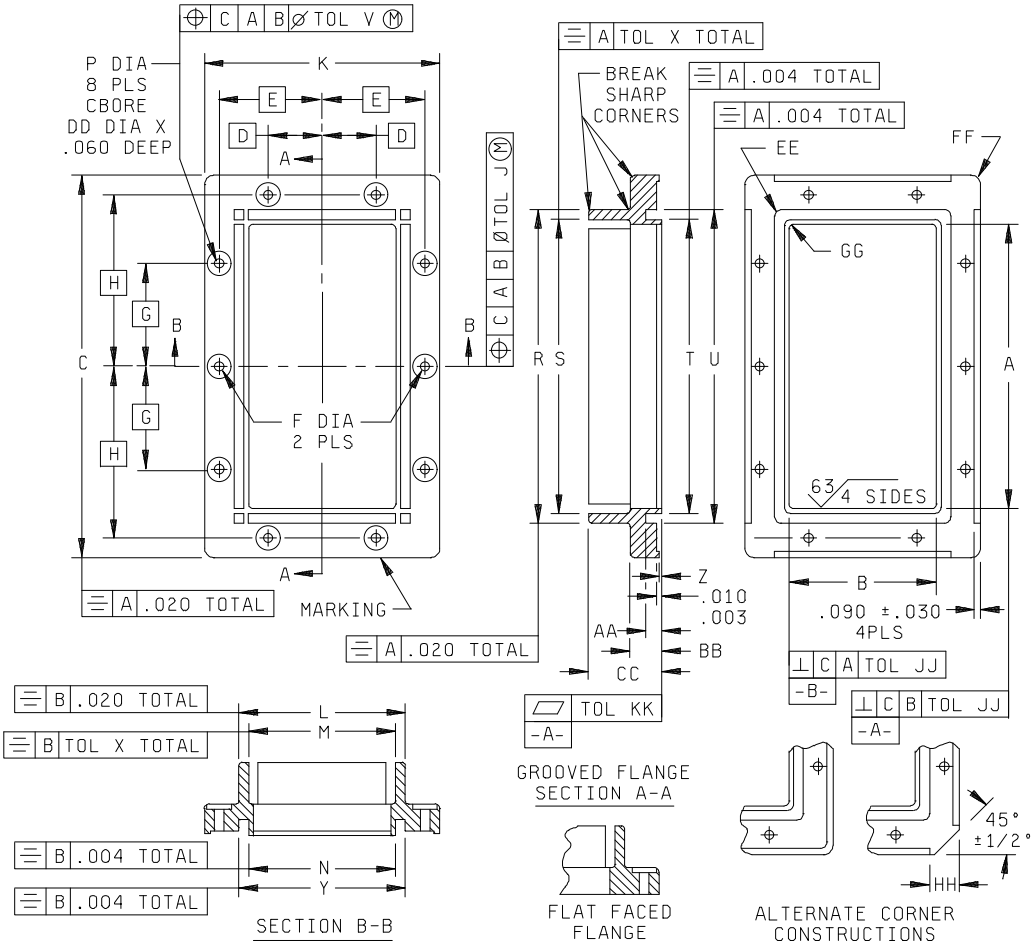

FIGURE 1. Flange.

DISTRIBUTION STATEMENT A. Approved for public release; distribution is unlimited.

NOTES:

1. Dimensions are in inches.
2. Metric equivalents (to the nearest 0.01 mm) are given for general information only and are based upon 1.00 inch = 25.4 mm.
3. Mating surfaces, including seal groove, shall not exceed 63 microinches in accordance with ASME B46.1, except that flaws shall be included in the roughness height measurement.
4. Flat face flanges require a metal-rubber seal at the junction. These seals are covered by MIL-DTL-24211.
5. For lettered dimensions, see table I.
6. Counterbore of the eight holes is not required when flanges are made from bar stock.

Inches	mm
.003	0.08
.004	0.10
.010	0.25
.020	0.51
.030	0.76
.040	1.02
.060	1.52
.090	2.29

FIGURE 1. Flange - Continued.

TABLE I. Dash numbers and dimensions.

PIN M3922/52- 1/						Dimensions 2/						
Dash No. 3/	Used with Waveguide M85/1-	Used with Mating flange	Dash No 4/	Used with Waveguide M85/1-	Used with Mating flange	A	B	C ±.02 (0.51)	D BSC	E BSC	F Dia.	G BSC
001 023	015 017	5/	002 024	018, 019, 168	5/	6.500 ±.005 (165.10) (0.13)	3.250 ±.005 (82.55) (0.13)	8.69 (220.73)	1.249 (31.72)	2.311 (58.70)	.330 ±.005 (8.38) (0.13)	2.374 (60.30)
003 025	021 023	“	004 026	025, 026, 169	“	5.100 ±.005 (129.54) (0.13)	2.550 ±.005 (64.77) (0.13)	7.16 (181.86)	1.031 (26.19)	1.925 (48.90)	.266 ±.005 (6.76) (0.13)	1.987 (25.07)
005 027	027 031	“	006 028	029, 030, 170	“	4.300 ±.005 (109.22) (0.13)	2.150 ±.005 (54.61) (0.13)	6.34 (161.04)	.938 (23.82)	1.720 (43.69)	“	1.787 (45.39)
007 029	033 037	“	008 030	035, 036, 171	“	3.400 ±.005 (86.36) (0.13)	1.700 ±.005 (43.18) (0.13)	5.44 (138.18)	.671 (17.04)	1.500 (38.10)	“	1.344 (34.14)
009 031	039 043	“	010 032	041, 042, 172	“	2.840 ±.005 (72.14) (0.13)	1.340 ±.005 (34.04) (0.13)	4.50 (114.30)	.578 (14.68)	1.164 (29.57)	.257 ±.003 (6.53) (0.08)	1.281 (32.54)
011 033	045 049	“	012 034	047, 048, 173	“	2.290 ±.005 (58.17) (0.13)	1.145 ±.005 (29.08) (0.13)	3.88 (98.55)	.500 (12.70)	1.050 (26.67)	.257 ±.002 (6.53) (0.05)	1.070 (27.18)
013 035	051 055	“	014 036	053, 054, 174	“	1.872 ±.005 (47.55) (0.13)	.872 ±.005 (22.15) (0.13)	3.50 (88.90)	.438 (11.12)	.914 (23.22)		.563 (14.30)
015 037	057 061	“	016 038	059, 060, 175	“	1.590 ±.004 (40.39) (0.10)	.795 ±.004 (20.19) (0.10)	3.19 (81.03)	.375 (9.52)	.875 (22.22)		.500 (12.70)
017 039	063 067	“	018 040	065, 066, 176	“	1.372 ±.004 (34.85) (0.10)	.622 ±.004 (15.80) (0.10)	2.69 (68.33)	.313 (7.95)	.719 (18.26)		.438 (11.12)
019 041	069 073	“	020 042	071, 072, 177	“	1.122 ±.004 (28.50) (0.10)	.497 ±.004 (12.62) (0.10)	2.50 (63.50)	”	.640 (16.26)		.375 (9.52)
021 043	075 079	“	022 044	077, 078, 178	“	.900 ±.003 (22.86) (0.08)	.400 ±.003 (10.16) (0.08)	2.09 (53.09)	“	.578 (14.68)		.312 (7.92)

See footnotes at end of table.

TABLE I. Dash numbers and dimensions - Continued.

Dimensions 2/												
Dash No. 3/	Dash No. 4/	H BSC	J	K ±.02 (0.51)	L ±.02 (0.51)	M	N ±.004 (0.10)	P Dia.	R ±.02 (0.51)	S	T ±.004 (0.10)	U ±.004 (0.10)
001 023	002 024	3.937 (100.00)	.012 (0.30)	5.44 (138.18)	3.81 (96.77)	3.420 -.001 (86.87) (0.03) +.000	3.630 (92.20)	.330 ±.005 (8.38) (0.13)	7.06 (179.32)	6.670 -.001 (169.42) (0.03) +.000	6.880 (174.75)	7.452 (189.28)
003 025	004 026	3.200 (81.28)	.011 (0.28)	4.62 (117.35)	3.10 (78.74)	2.720 -.001 (69.09) (0.03) +.000	2.920 (74.17)	.266 ±.005 (6.76) (0.13)	5.67 (144.02)	5.270 -.001 (133.86) (0.03) +.000	5.470 (138.94)	6.042 (153.47)
005 027	006 028	2.795 (71.00)	“	4.19 (106.43)	2.69 (68.33)	2.320 -.001 (58.93) (0.03) +.000	2.510 (63.75)	“ “	4.88 (123.95)	4.470 -.001 (113.54) (0.03) +.000	4.660 (118.36)	5.232 (132.89)
007 029	008 030	2.344 (59.54)	“	3.75 (95.25)	2.25 (57.15)	1.870 -.003 (47.50) (0.08) +.000	2.062 (53.37)	“ “	4.00 (101.60)	3.570 -.003 (90.68) (0.08) +.000	3.782 (96.06)	4.354 (110.59)
009 031	010 032	1.914 (48.62)	.004 (0.10)	3.00 (76.20)	1.75 (44.45)	1.510 -.003 (38.35) (0.08) +.000	1.624 (41.25)	.257 +.005 (6.53) (0.13) -.000	3.25 (82.55)	3.010 -.003 (76.45) (0.08) +.000	3.124 (79.35)	3.500 (88.90)
011 033	012 034	1.620 (41.15)	.005 (0.13)	2.75 (69.85)	1.50 (38.10)	1.283 -.003 (32.59) (0.08) +.000	1.395 (35.43)	“ “	2.63 (66.80)	2.428 -.003 (61.67) (0.08) +.000	2.540 (64.52)	2.916 (74.07)
013 035	014 036	1.414 (35.92)	---	2.50 (63.50)	1.25 (31.75)	1.010 -.004 (25.65) (0.10) +.000	1.122 (28.50)	“ “	2.25 (57.15)	2.010 -.004 (51.05) (0.10) +.000	2.122 (53.90)	2.498 (63.45)
015 037	016 038	1.273 (32.33)	---	2.44 (61.98)	1.13 (28.70)	.931 -.002 (23.64) (0.05) +.000	1.045 (26.54)	“ “	1.94 (49.28)	1.726 -.002 (43.84) (0.05) +.000	1.840 (46.74)	2.216 (56.29)
017 039	018 040	1.094 (27.79)	---	1.94 (49.28)	1.00 (25.40)	.758 -.003 (19.25) (0.08) +.000	.872 (22.15)	.196 +.004 (4.98) (0.10) -.000	1.75 (44.45)	1.508 -.003 (38.30) (0.08) +.000	1.622 (41.20)	1.904 (48.36)
019 041	020 042	.953 (24.21)	---	1.75 (44.45)	.88 (22.35)	.633 -.003 (16.08) (0.08) +.000	.747 (18.97)	.169 +.002 (4.29) (0.05) -.000	1.50 (38.10)	1.258 -.003 (31.95) (0.08) +.000	1.372 (34.85)	1.654 (42.01)
021 043	022 044	.828 (21.03)	---	1.59 (40.39)	.75 (19.05)	.506 -.001 (12.86) (0.03) +.000	.624 (15.85)	.169 +.002 (4.29) (0.05) -.000	1.38 (35.05)	1.006 -.001 (25.55) (0.03) +.000	1.124 (28.55)	1.406 (35.71)

See footnotes at end of table.

TABLE I. Dash numbers and dimensions - Continued.

Dimensions 2/															
Dash No. 3/	Dash No. 4/	V	X	Y ±.0040 (0.10)	Z Max	AA ±.005 (0.13)	BB ±.02 (0.51)	CC ±.02 (0.51)	DD ±.005 (0.13)	EE ±.003 (0.08)	FF ±.02 (0.51)	GG Max	HH ±.02 (0.51)	JJ	KK
001 023	002 024	.012 (0.30)	.003 (0.08)	4.202 (106.73)	.005 (0.13)	.062 (1.57)	.50 (12.70)	.88 (22.35)	.594 (15.09)	.143 (3.63)	.25 (6.35)	.05 (1.27)	.25 (6.35)	.005 (0.13)	.005 (0.13)
003 025	004 026	.011 (0.28)	.”	3.492 (88.70)	“	“	“	“	.531 (13.49)	“	“	“	“	“	“
005 027	006 028	“	“	3.082 (78.28)	“	“	“	“	“	“	“	“	“	“	“
007 029	008 030	“	“	2.634 (66.90)	“	“	“	“	“	“	“	“	“	“	“
009 031	010 032	.007 (0.18)	.”	2.000 (50.80)	.002 (0.05)	.053 (1.35)	.38 (9.65)	.69 (17.53)	“	.094 (2.39)	.31 (7.87)	“	.31 (7.87)	“	“
011 033	012 034	“	“	1.771 (44.98)	“	“	“	“	“	“	“	“	“	“	“
013 035	014 036	“	“	1.498 (38.05)	“	“	“	“	“	“	“	.03 (0.76)	“	“	“
015 037	016 038	“	.002 (0.05)	1.421 (36.09)	“	“	“	“	“	“	“	“	“	.004 (0.10)	.004 (0.10)
017 039	018 040	.006 (0.15)	“	1.154 (29.31)	“	.040 (1.02)	.25 (6.35)	.50 (12.70)	.438 (11.31)	.070 (1.78)	.25 (6.35)	“	.25 (6.35)	“	“
019 041	020 042	.005 (0.13)	“	1.029 (26.14)	“	“	“	“	.406 (10.31)	“	“	“	“	“	“
021 043	022 044	.005 (0.13)	“	.906 (23.01)	“	“	“	“	.406 (10.31)	“	“	“	“	.003 (0.08)	.003 (0.08)

1/ PINs 001 through 022 are for flat flanges; PINs 023 through 044 are for grooved flanges.
2/ Metric equivalents are in parentheses.
3/ Copper alloy.
4/ Aluminum alloy.
5/ Each flange mates with an identical PIN.

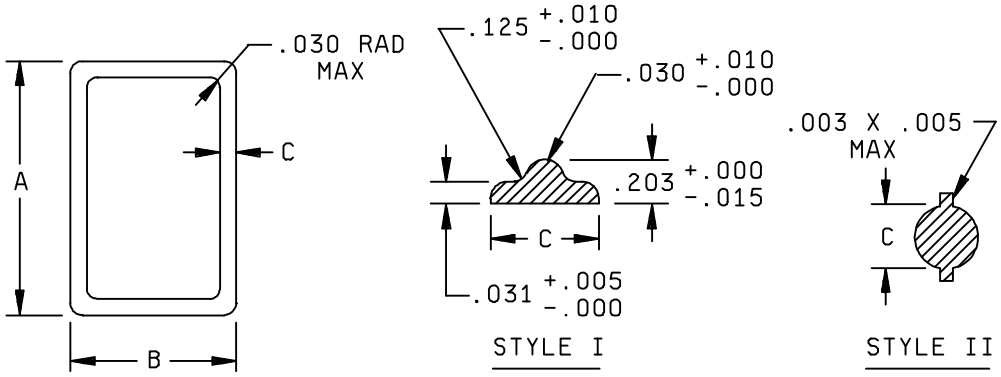

NOTES:

1. Dimensions are in inches.
2. Metric equivalents (to the nearest .01 mm) are given for general information only and are based on 1.00 inch = 25.4 mm.
3. One seal is to be supplied with each grooved flange.

Inches	mm	Inches	mm
.003	0.08	.125	3.18
.005	0.13	.164	4.17
.010	0.25	.190	4.83
.015	0.38	.203	5.16
.030	0.76	.250	6.35
.031	0.79	.3125	7.94
.040	1.02	.625	15.88
.047	1.19	.75	19.05
.062	1.57	1.0	25.40
.078	1.98	1.5	38.10

FIGURE 2. Grooved flange seal.

TABLE II. Gasket dimensions.

Style	Flange used with M3922/52-	Dimensions 1/		
		A	B ±.010 (0.25)	C
I	023-024	7.454 ±.015 (189.33) (0.38)	4.204 (106.78)	.288 - .010 (7.32) (0.25) +.000
I	025-026	6.044 ±.015 (153.52) (0.38)	3.494 (88.75)	"
I	027-028	5.234 ±.015 (132.94) (0.38)	3.084 (78.33)	"
I	029-030	4.336 ±.015 (110.13) (0.38)	2.636 (66.95)	"
II	031-032	3.451 ±.015 (87.66) (0.38)	1.951 (49.56)	.139 ±.004 (3.53) (0.10)
II	033-034	2.867 ±.010 (72.82) (0.25)	1.722 (43.74)	"
II	035-036	2.449 ±.010 (62.20) (0.25)	1.449 (36.80)	"
II	037-038	2.167 ±.010 (55.04) (0.25)	1.372 (34.85)	"
II	039-040	1.866 ±.010 (47.40) (0.25)	1.116 (28.35)	.103 ±.003 (2.62) (0.08)
II	041-042	1.616 ±.010 (41.05) (0.25)	.991 (25.17)	"
II	043-044	1.368 ±.010 (34.75) (0.25)	.868 (22.05)	"

1/ Metric equivalents are in parentheses.

REQUIREMENTS:

Dimensions and configuration:

Flange: See figure 1 and table I.

Gasket: See figure 2.

Material: Flange: Metallic base alloy as specified in table I.

Items supplied with flanges: See table III.

Marking: See figure 1.

Part or Identifying Number (PIN): M3922/52- (and dash number from table I.)

AN nomenclature and engineering data: See table IV.

TABLE III. Items supplied with flange.

PIN 1/ M3922/52-	Hexagon head cap screw	Hexagon nut	Spring lockwasher	Quantity (each)
001, 002, 023, 024	(5/16) .3125-18 UNC-2A, 1.5 inch long	(5/16) .3125-18 UNC-2B	.3125 x .078	5
003, 004, 005, 006, 007, 008, 025, 026, 027, 028, 029, 030	(1/4) .250-20 UNC-2A, 1.5 inch long	(1/4) .250-20 UNC-2B	.250 x .062	5
009, 010, 011, 012, 031, 032, 033, 034	(1/4) .250-20 UNC-2A, 1.0 inch long	(1/4) .250-20 UNC-2B	.250 x .062	5
013, 014, 015, 016, 035, 036, 037, 038	(1/4) .250-20 UNC-2A, 1.0 inch long	(1/4) .250-20 UNC-2B	.250 x .062	4
017, 018, 039, 040	(No. 10) .190-32 UNF-2A, .750 inch long	(No. 10) .190-32 UNF-2B	.190 x .047	4
019, 020, 021, 022, 041, 042, 043, 044	(No. 8) .164-32 UNC-2A, .750 inch long	(No. 8) .164-32 UNC-2B	.164 x .040	4

1/ One gasket (see figure 2) shall be supplied with each PIN 023 through 044.

TABLE IV. Cross-reference of PINs/AN nomenclature and engineering data.

PIN M3922/52-	AN nomenclature	Frequency range
		GHz
001	UG-1714/U	1.12 - 1.70
002	UG-1720/U	1.12 - 1.70
003	UG-1715/U	1.45 - 2.20
004	UG-1717/U	1.45 - 2.20
005	UG-1716/U	1.70 - 2.60
006	UG-1711/U	1.70 - 2.60
007	UG-1712/U	2.20 - 3.30
008	UG-1713/U	2.20 - 3.30
009	UG-1724/U	2.60 - 3.95
010	UG-1725/U	2.60 - 3.95
011	UG-1726/U	3.30 - 4.90
012	UG-1727/U	3.30 - 4.90
013	UG-1728/U	3.95 - 5.85
014	UG-1729/U	3.95 - 5.85
015	UG-1730/U	4.90 - 7.05
016	UG-1731/U	4.90 - 7.05
017	UG-1732/U	5.85 - 8.20
018	UG-1733/U	5.85 - 8.20
019	UG-1734/U	7.05 - 10.0
020	UG-1735/U	7.05 - 10.0
021	UG-1736/U	8.20 - 12.40
022	UG-1737/U	8.20 - 12.40
023	UG-1362/U	1.12 - 1.70
024	UG-1343/U	1.12 - 1.70
025	UG-1718/U	1.45 - 2.20
026	UG-1719/U	1.45 - 2.20
027	UG-1344/U	1.70 - 2.60
028	UG-1345/U	1.70 - 2.60
029	UG-1346/U	2.20 - 3.30
030	UG-1347/U	2.20 - 3.30
031	UG-1348/U	2.60 - 3.95
032	UG-1349/U	2.60 - 3.95
033	UG-1350/U	3.30 - 4.90
034	UG-1351/U	3.30 - 4.90
035	UG-1352/U	3.95 - 5.85
036	UG-1353/U	3.95 - 5.85
037	UG-1354/U	4.90 - 7.05
038	UG-1355/U	4.90 - 7.05
039	UG-1356/U	5.85 - 8.20
040	UG-1357/U	5.85 - 8.20
041	UG-1358/U	7.05 - 10.0
042	UG-1359/U	7.05 - 10.0
043	UG-1360/U	8.20 - 12.40
044	UG-1361/U	8.20 - 12.40

Custodians:
Army - CR
Navy - EC
Air Force - 11
DLA - CC

Review activities:
Army - AR, AV, MI
Navy - AS, MC, OS
Air Force - 19, 99

Preparing activity:
DLA - CC

(Project 5985-1128)