MILITARY SPECIFICATION SHEET

FLANGES, WAVEGUIDE (CHOKE)

(SQUARE, 4 HOLE)

This specification is approved for use by all Departments and Agencies of the Department of Defense.

The complete requirements for procuring the flanges described herein shall consist of this document and the latest issue of Specification MIL-F-3922.

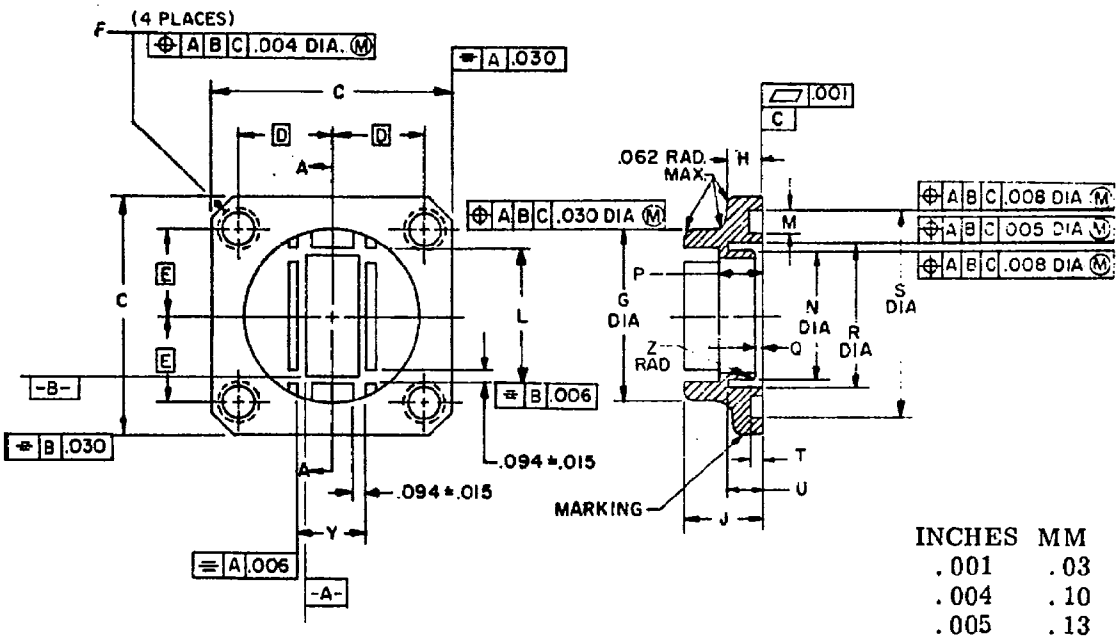

INCHES	MM
.001	.03
.004	.10
.005	.13
.006	.15
.008	.20
.015	.38
.030	.76
.062	1.57
.094	2.39

FIGURE 1. Flange.

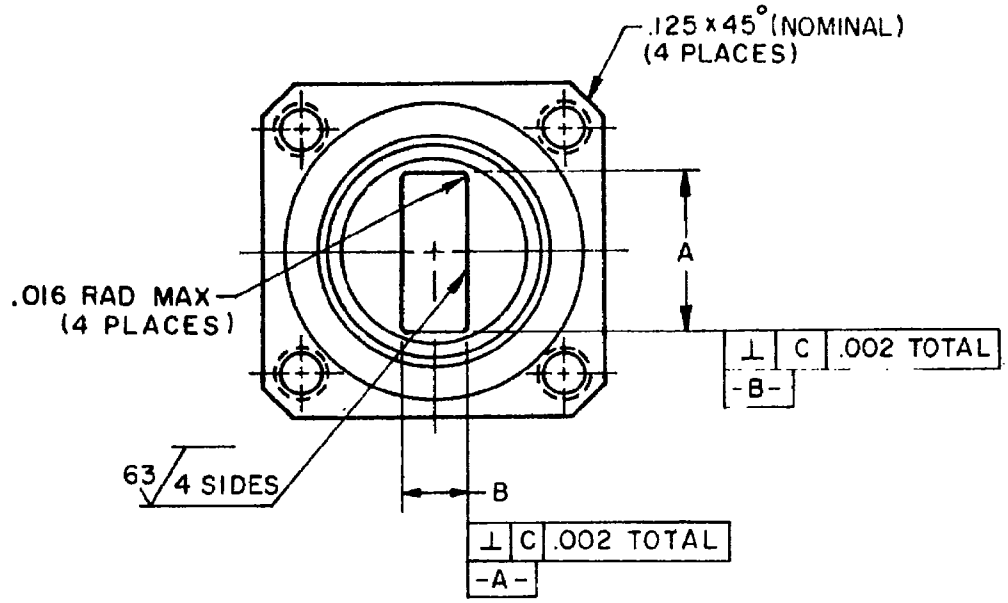

INCHES	MM
.002	.05
.016	.41
.125	3.18

NOTES:
1. Dimensions are in inches.
2. Metric equivalents (to the nearest .01 mm) are given for general information only and are based upon 1 inch = 25.4 mm.
3. Mating surfaces, including seal groove, shall not exceed 63 microinches in accordance with ANSI-B46.1-1962, except that flaws shall be included in the roughness height measurement.
4. End item offered shall be of single-piece construction.
5. For lettered dimensions, see table I.

FIGURE 1. Flange - Continued.

TABLE I. Part number characteristics and dimensions.

Part No. M3922/69-			Part No. M3922/69-			Part No. M3922/69-			Dimensions 1/ 2/		
Dash No. 3/	Used with part No. Waveguide M85/1-	Used with part No. Mating flange M3922/70-	Dash No. 4/	Used with part No. Waveguide M85/1-	Used with part No. Mating flange M3922/70-	Dash No. 5/	Used with part No. Waveguide M85/1-	Used with part No. Mating flange M3922/70-	A	B	C ±.015 (.38)
001	155 156	001	002	157 158 160	002 003	003	157 158 160	002 003	1.020 ±.003 (25.91) (.08)	.510 ±.003 (12.95) (.08)	1.687 (42.85)
004	094 096	010	005	097 098	011 012	006	097 098	011 012	.510 ±.002 (12.95) (.05)	.255 ±.002 (6.48) (.05)	1.312 (33.32)

Part No. M3922/69-			Dimensions 1/ 2/								
Dash No. 3/	Dash No. 4/	Dash No. 5/	D	E	F	G ±.010 (.25)	H	J ±.015 (.38)	L	M	N
001	002	003	.670 BSC. (17.02)	.640 BSC. (16.26)	.164-32 UNC-2B	1.485 (37.72)	.250 ±.005 (6.35) (.13)	.500 (12.70)	1.151 +.003 -.000 (29.24) (.08)	.113 ±.003 (2.87) (.08)	1.165 +.005 -.000 (29.59) (.13)
004	005	006	.497 BSC. (12.62)	.478 BSC. (12.14)	.138-32 UNC-2B	1.000 (25.40)	.187 ±.010 (4.75) (.25)	.375 (9.52)	.593 +.002 -.000 (15.07) (.05)	.160 ±.002 (4.06) (.05)	.583 ±.001 (14.81) (.03)

Part No. M3922/69-			Dimensions 1 2							
Dash No. 3	Dash No. 4	Dash No. 5	P	Q	R	S	T ±.002 (.05)	U	Y	Z ±.005 (.13)
001	002	003	.375 ±.005 (9.52) (.13)	.0125 ±.0010 (.32) (.03)	1.358 ±.005 (34.49) (.13)	1.634 ±.003 (41.50) (.08)	.065 (1.65)	.312 ±.003 (7.92) (.08)	.641 +.003 -.000 (16.28) (.08)	.030 (.76)
004	005	006	.250 ±.003 (6.35) (.08)	.006 ±.001 (.15) (.03)	.681 ±.002 (17.30) (.05)	1.069 -.003 -.000 (27.15) (.08)	.104 (2.64)	.156 ±.002 (3.96) (.05)	.338 -.002 -.000 (8.59) (.05)	.016 (.41)

1/ Dimensions are in inches (millimeters are in parentheses).
2/ Metric equivalents (to the nearest .01 mm.) are given for general information only and are based upon 1 inch = 25.4 mm.
3/ Material shall be copper alloy.
4/ Material shall be aluminum alloy 6061-T6 (QQ-A-200 8 or QQ-A-225 8).
5/ Material shall be aluminum alloy 6063-T6 (QQ-A-200 9).

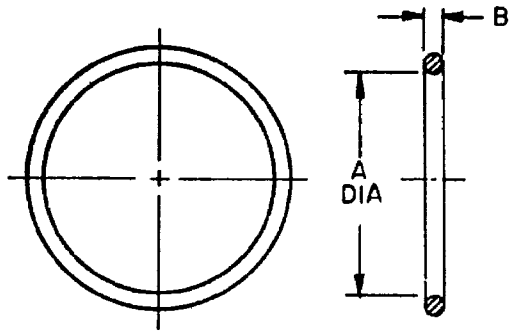

FIGURE 2. Gasket.

TABLE II. Gasket dimensions.

Gasket used with part number M3922/69-	Dimensions 1/ 2/	
	A	B
001, 002, 003	1.424 ±.006 (36.17) (.15)	.103 ±.003 (2.62) (.08)
004, 005, 006	.779 ±.005 (19.79) (.13)	.141 ±.004 (3.58) (.10)

1/ Dimensions are in inches (millimeters are in parentheses).
2/ Metric equivalents (to the nearest .01 mm) are given for general information only and are based upon 1 inch = 25.4 mm.

NOTE:
1. For lettered dimensions, see table II.

REQUIREMENTS:

Dimensions and configuration:
Flange: See figure 1 and table I.
Gasket: See figure 2 and table II.

Material:
Flange: Metallic alloy as specified in table I.
Gasket: Silicone rubber.

Marking: See figure 1.
Part number: M3922/69-(number taken from table I).

Items supplied with flange: See table III.

TABLE III. Items supplied with flange.

Item	Item description for part No. M3922/69-		Quantity
	001, 002, 003	004, 005, 006	
Gasket	Dimensions as shown on table II	Dimensions as shown on table II	1
Socket-head cap screw	.164-32UNC-2A x .625 long	.138-32UNC-2A x .500 long	4
Lockwasher	.280 OD x .168 ID x .031 thick	.239 OD x .141 ID x .031 thick	4

AN nomenclature and engineering data: See table IV.

TABLE IV. Cross-reference of part numbers/AN nomenclature and engineering data.

Part No. M3922/69-	AN nomenclature	Engineering data			
		Frequency range	1/ Return loss		
			At 1.25 f_c	At 1.5 f_c	At 1.9 f_c
		GHz	dB	dB	dB
001	UG/1494/U	7.0 - 11.0	-48.4	-51.9	-55.1
002, 003	---	7.0 - 11.0	-48.4	-51.9	-55.1
004, 005, 006	---	15.0 - 22.0	-35.4	-38.9	-42.1

1/ Return loss was calculated as follows (where f_c = cutoff frequency (in GHz)):

$$\text{Return loss (dB)} = 20 \operatorname{Log}_{10} \left[\frac{\lambda_g \pi^2}{2a} \left(\frac{\Delta H}{a} \right)^2 \right]$$

Where a = wide dimension of flange opening in meters

λ_g = wavelength inside the waveguide, $\lambda_g = \dfrac{\lambda}{\sqrt{1-\left(\dfrac{\lambda}{\lambda_c}\right)^2}}$

λ_c = cutoff wavelength

ΔH = maximum misalignment of flange in the H plane direction and

$$\Delta H = \Delta_{TP} + \Delta_{BH} + \Delta_{BS} + \Delta_{DD}$$

where Δ_{TP} = true position tolerance of bolt hole axis

Δ_{BH} = tolerance of bolt holes

Δ_{BS} = tolerance of bolt shank

Δ_{DD} = difference in diameters of the smallest possible bolt hole and the largest possible bolt shank

This return loss calculation is for the worst case condition, which assumes the maximum mutual displacement of the flange and its mate in the H plane (no twist). The flange is assumed to be mated with the mating flange listed in table I.

Custodians:
Army - EL
Navy - EC
Air Force - 85

Review activities:
Army - MI, MU
Navy - OS
Air Force - 11, 80
DSA - ES

User activities:
Army - ME, AV
Navy - AS, MC, SH

Preparing activity:
Navy - EC

Agent:
DSA - ES

(Project 5985-0773)