INCH-POUND

MIL-DTL-3928/19D
15 August 2001
SUPERSEDING
MIL-S-3928/19C
15 July 1988

DETAIL SPECIFICATION SHEET

SWITCHES, RADIO-FREQUENCY
TRANSMISSION LINE (COAXIAL) (ELECTRICALLY OPERATED)
CLASS 5, TR

This specification is approved for use by all Departments and Agencies of the Department of Defense.

Requirements for acquiring the switch described herein shall consist of this specification and MIL-DTL-3928.

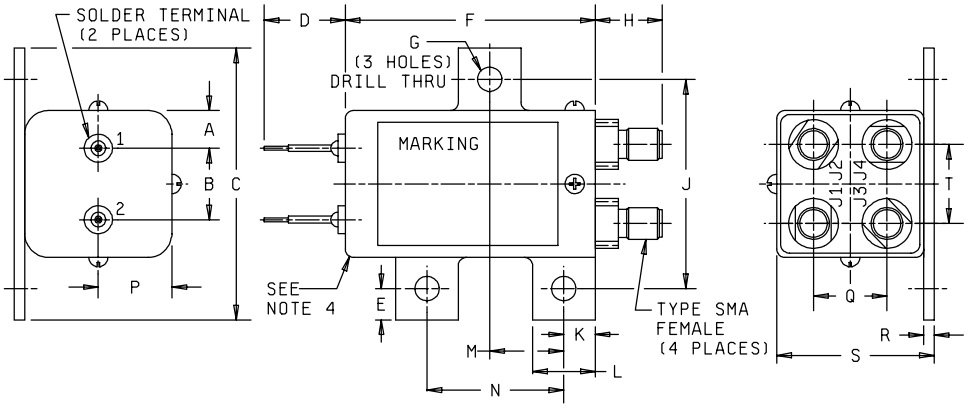

Dimensions									
Letter	Inches		Millimeters		Letter	Inches		Millimeters	
	Max	Min	Max	Min		Max	Min	Max	Min
A	.35	.29	8.9	7.4	K	.28	.22	7.1	5.6
B	.65	.59	16.5	15.0	L	.53	.47	13.5	11. 9
C	2.18	2.14	55.4	54.4	M	.553	.537	14.0	13.6
D	.45	---	11.4	---	N	1.098	1.082	27.89	27.48
E	.22	.16	5.6	4.1	P	.640	.620	16.26	15.75
F	2.15	---	54.6	---	Q	.644	---	16.36	---
G	.154 dia	.144 dia	3.91 dia	3.66 dia	R	.073	.053	1.85	1.35
H	.35	---	8.9	---	S	1.37	---	34.8	---
J	1.788	1.772	45.42	45.01	T	.644	---	16.36	---

NOTES:
1. Dimensions are in inches.
2. Metric equivalents are given for general information only (1.00 inch = 25.4 mm).
3. Unless otherwise specified, tolerances are ± .010 (± 0.25 mm) for three place decimals and ± .03 (±0.8 mm) for two place decimals.
4. Round corners of case may be squared.

FIGURE 1. PINs M3928/19-02, M3928/19-08, and M3928/19-13.

DISTRIBUTION STATEMENT A. Approved for public release; distribution is unlimited.

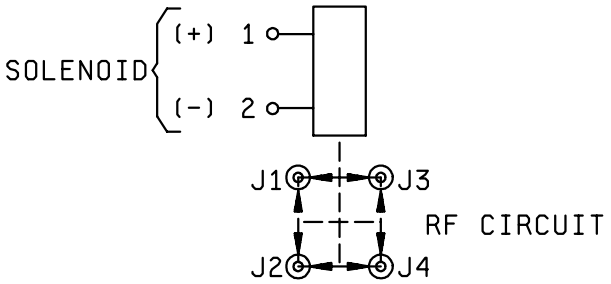

POS.1. DEENERGIZED OR FAILSAFE POSITION
J1-J3 AND J2-J4
POS.2. ENERGIZED POSITION, J1-J2 AND J3-J4.

SCHEMATIC (SHOWN IN POSITION 1)

NOTES:
1. Dimensions are in inches.
2. Metric equivalents are given for general information only (1.00 inch = 25.4 mm).
3. Unless otherwise specified, tolerances are ± .010 (± 0.25 mm) for three place decimals and ± .03 (±0.8 mm) for two place decimals.
4. Round corners of case may be squared.

FIGURE 1. PINs M3928/19-02, M3928/19-08, and M3928/19-13 - Continued.

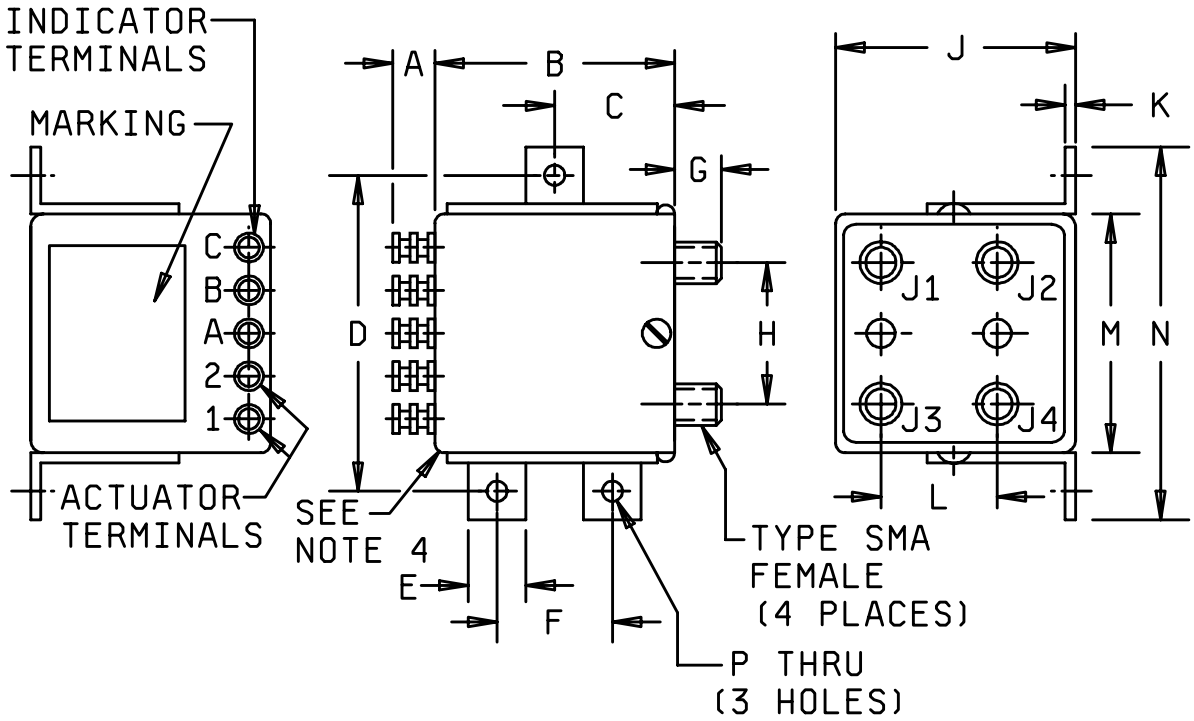

FIGURE 2. PIN M3928/19-03.

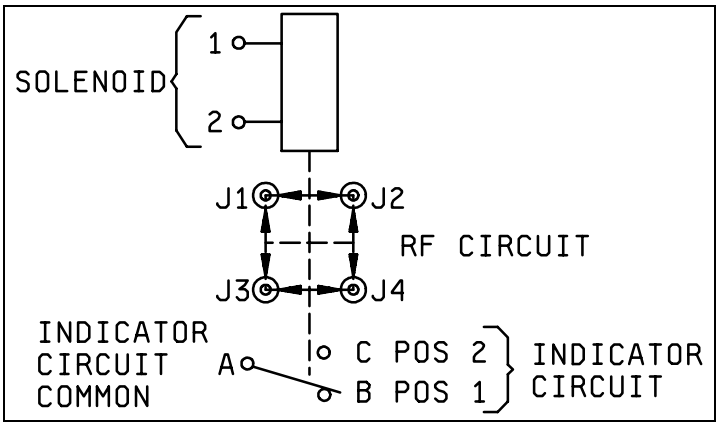

POSITION 1. (DEENERGIZED OR FAILSAFE POSITION) J1-J2 AND J3-J4.
POSITION 2. (ENERGIZED POSITION) J1-J3 AND J2-J4.

SCHEMATIC (SHOWN IN POSITION 1)

Dimensions									
Letter	Inches		Millimeters		Letter	Inches		Millimeters	
	Max	Min	Max	Min		Max	Min	Max	Min
A	.200	---	5.08	---	H	.644	---	16.36	---
B	1.53	1.47	38.9	37.3	J	1.33	1.27	33.8	32.3
C	.81	.75	20.6	19.1	K	.07	---	1.8	---
D	1.810	1.790	45.97	45.47	L	.644	---	16.36	---
E	.41	.35	10.4	8.9	M	1.30	1.24	33.0	31.5
F	.810	.790	20.57	20.07	N	2.22	2.16	56.4	54.9
G	.30	.24	7.6	6.1					

NOTES:
1. Dimensions are in inches.
2. Metric equivalents are given for general information only (1.00 inch = 25.4 mm).
3. Unless otherwise specified, tolerances are ± .010 (± 0.25 mm) for three place decimals and ± .03 (±0.8 mm) for two place decimals.
4. Round corners of case may be squared.

FIGURE 2. PIN M3928/19-03 - Continued.

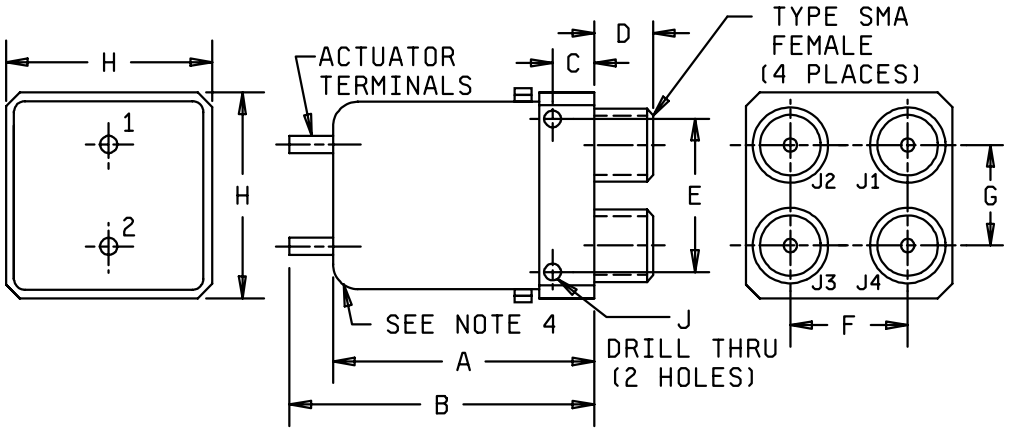

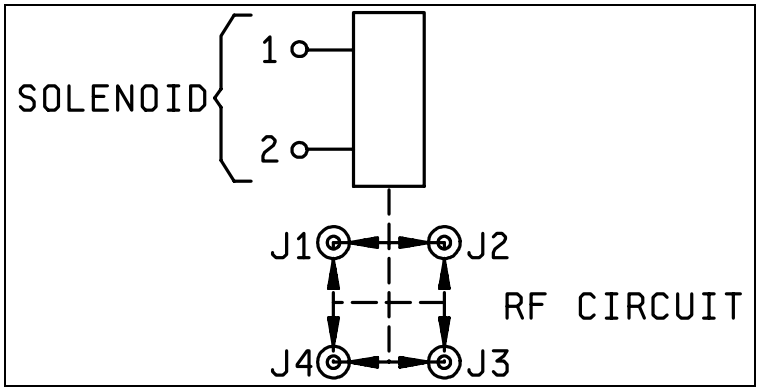

POS. 1. DEENERGIZED OR FAILSAFE POSITION, J1-J2 AND J3-J4
POS. 2. ENERGIZED POSITION, J1-J4 AND J2-J3.

SCHEMATIC (SHOWN IN POSITION 1)

Dimensions									
Letter	Inches		Millimeters		Letter	Inches		Millimeters	
	Max	Min	Max	Min		Max	Min	Max	Min
A	2.90	2.84	73.7	72.1	F	.90	.84	22.9	21.3
B	3.25	---	82.5	---	G	.90	.84	22.9	21.3
C	.40	.34	10.2	8.6	H	1.84	1.78	46.7	45.2
D	.41	.35	10.4	8.9	J	.190 dia	.170 dia	4.83 dia	4.32 dia
E	1.46	1.40	37.1	35.6					

NOTES:
1. Dimensions are in inches.
2. Metric equivalents are given for general information only (1.00 inch = 25.4 mm).
3. Unless otherwise specified, tolerances are ± .010 (± 0.25 mm) for three place decimals and ± .03 (±0.8 mm) for two place decimals.
4. Round corners of case may be squared.

FIGURE 3. PIN M3928/19-04.

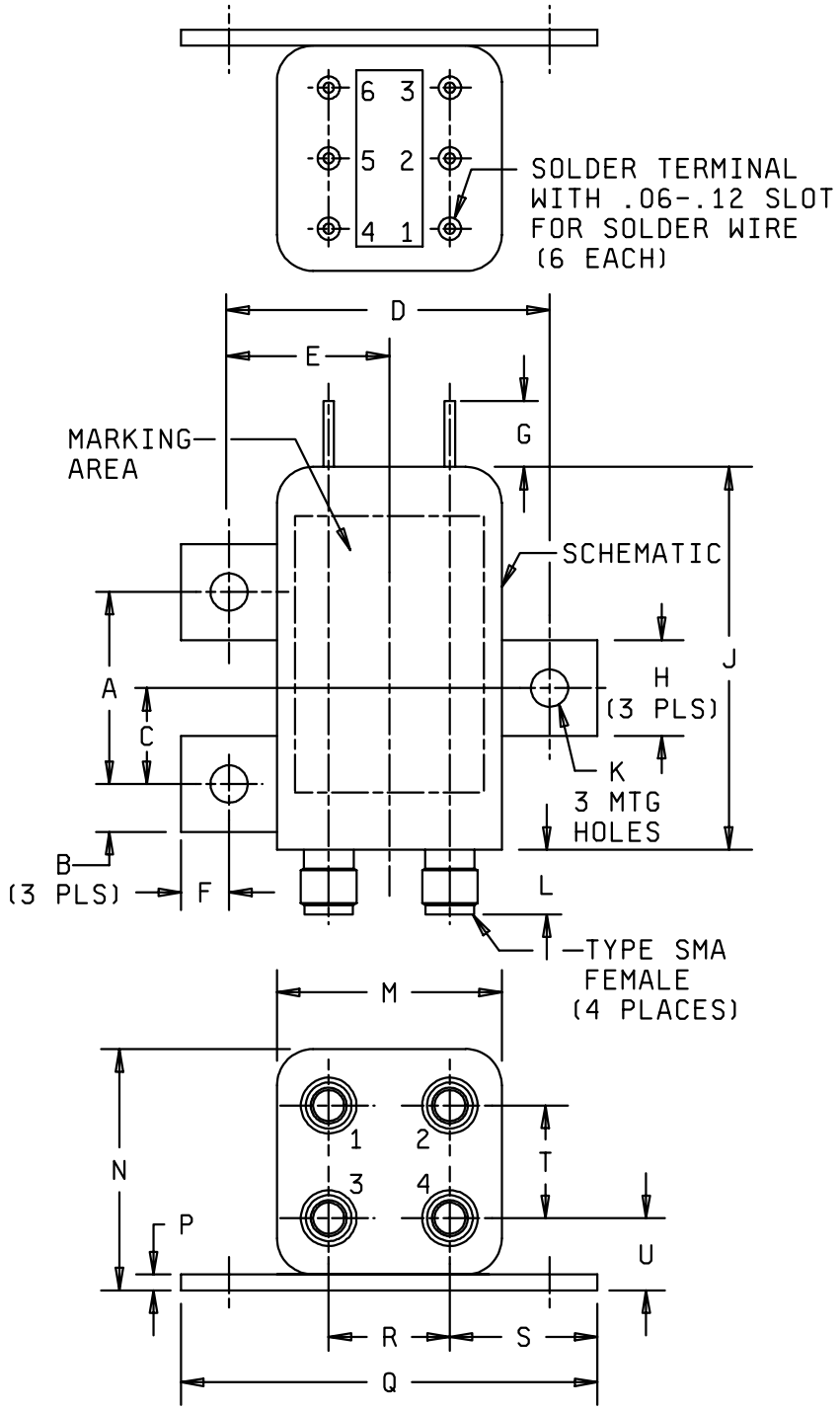

FIGURE 4. PINs M3928/19-05, M3928/19-09, and M3928/19-14.

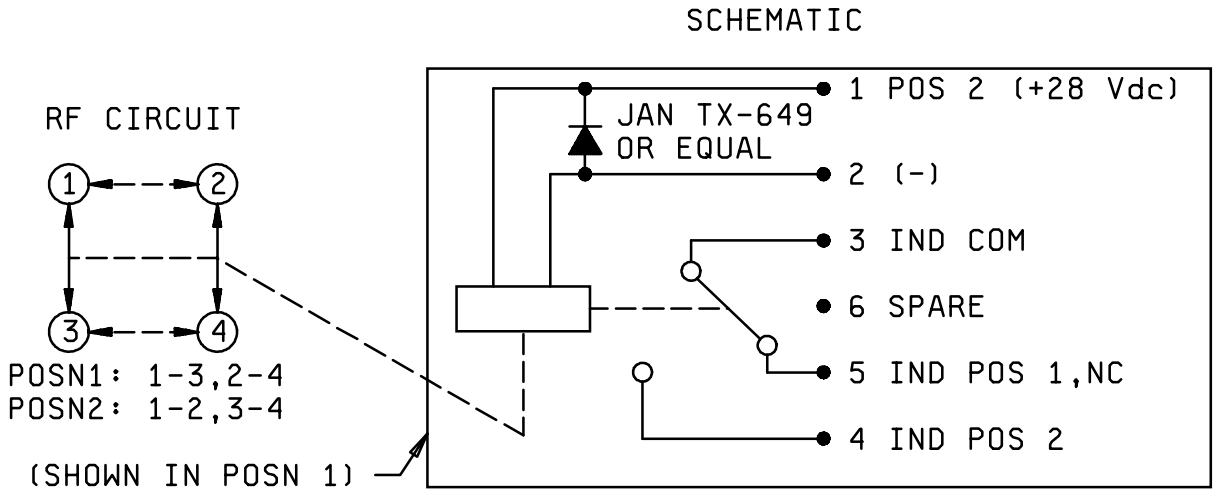

Dimensions									
Letter	Inches		Millimeters		Letter	Inches		Millimeters	
	Max	Min	Max	Min		Max	Min	Max	Min
A	1.098	1.082	27.89	27.48	L	.45	---	11.4	---
B	.28	.22	7.1	5.6	M	1.30	---	33.0	---
C	.553	.537	14.0	13.6	N	1.37	---	34.8	---
D	1.788	1.772	45.4	45.0	P	.073	.053	1.85	1.35
E	.900	.880	22.86	22.35	Q	2.19	2.13	55.6	54.1
F	.22	.16	5.6	4.1	R	.644	---	16.36	---
G	.25	---	6.4	---	S	.79	.73	20.1	18.5
H	.53	.47	13.5	11.9	T	.644	---	16.36	---
J	1.85	---	47.0	---	U	.40	.34	10.2	8.6
K	.159 dia	.139 dia	4.04 dia	3.53 dia					

NOTES:
1. Dimensions are in inches.
2. Metric equivalents are given for general information only (1.00 inch = 25.4 mm).
3. Unless otherwise specified, tolerances are ± .010 (± 0.25 mm) for three place decimals and ± .03 (±0.8 mm) for two place decimals.
4. Round corners of case may be squared.

FIGURE 4. PINs M3928/19-05, M3928/19-09, and M3928/19-14 - Continued.

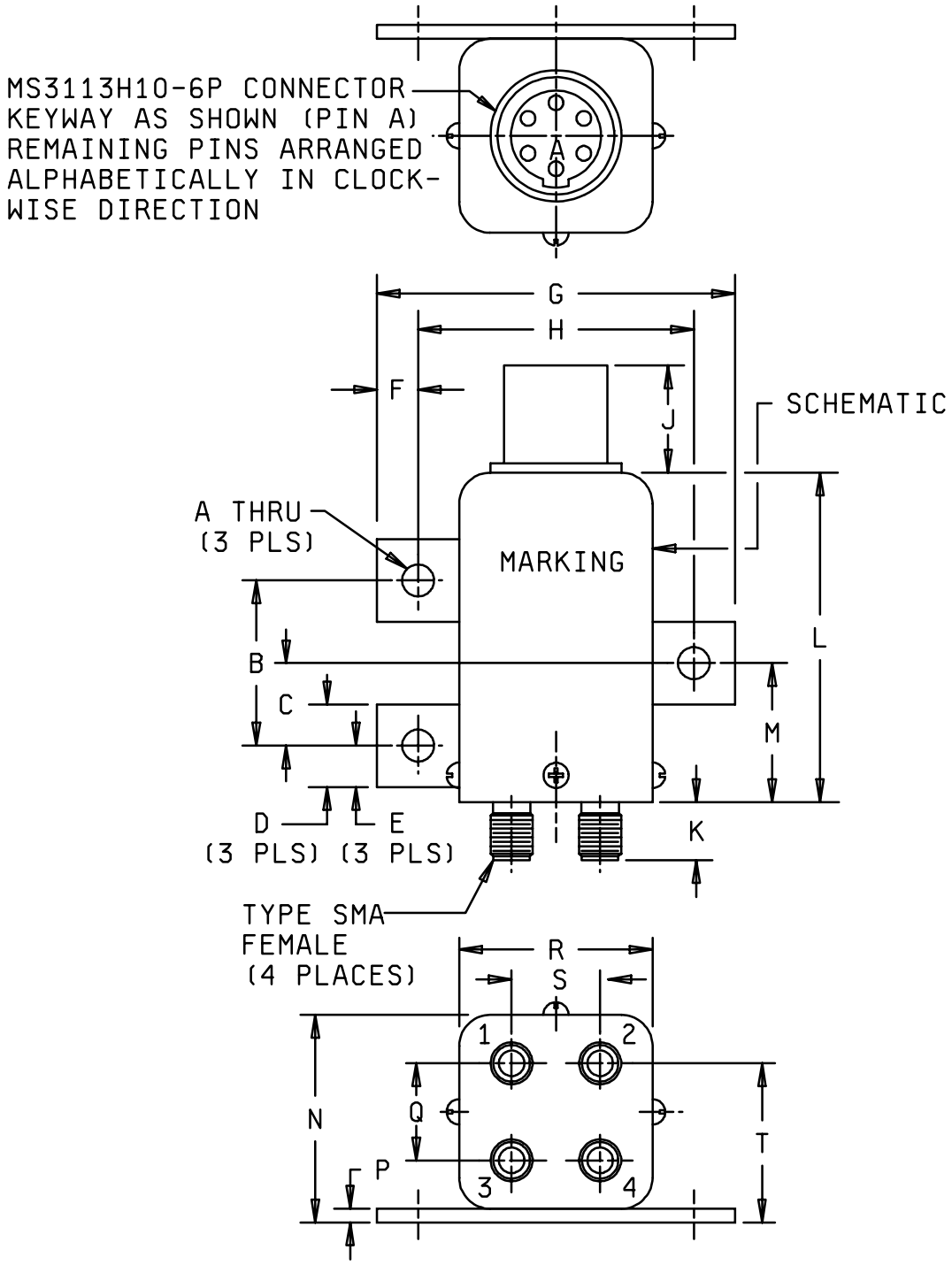

FIGURE 5. PIN M3928/19-06.

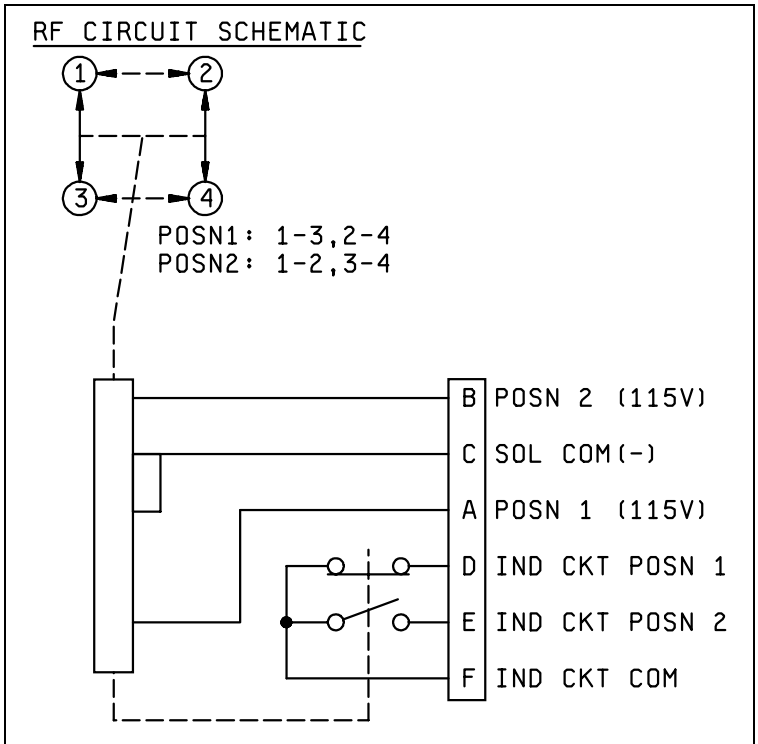

SCHEMATIC, CONTROL, AND
INDICATOR CIRCUIT

Dimensions									
Letter	Inches		Millimeters		Letter	Inches		Millimeters	
	Max	Min	Max	Min		Max	Min	Max	Min
A	.154 dia	.144 dia	3.91 dia	3.66 dia	K	.45	---	11.4	---
B	1.098	1.082	27.89	27.48	L	2.32	---	58.9	---
C	.553	.537	14.05	13.64	M	.860	.840	21.8	21.3
D	.53	.47	13.5	11.9	N	1.37	---	34.8	---
E	.28	.22	7.1	5.6	P	.073	.053	1.85	1.35
F	.22	.16	5.6	4.1	Q	.644	---	16.36	---
G	2.18	2.14	55.4	54.4	R	1.30	---	33.0	---
H	1.788	1.772	45.42	45.01	S	.644	---	16.36	---
J	.49	---	12.4	---	T	1.01	.95	25.65	24.13

NOTES:
1. Dimensions are in inches.
2. Metric equivalents are given for general information only (1.00 inch = 25.4 mm).
3. Unless otherwise specified, tolerances are ± .010 (± 0.25 mm) for three place decimals and ± .03 (±0.8 mm) for two place decimals.
4. Round corners of case may be squared.

FIGURE 5. PIN M3928/19-06 - Continued.

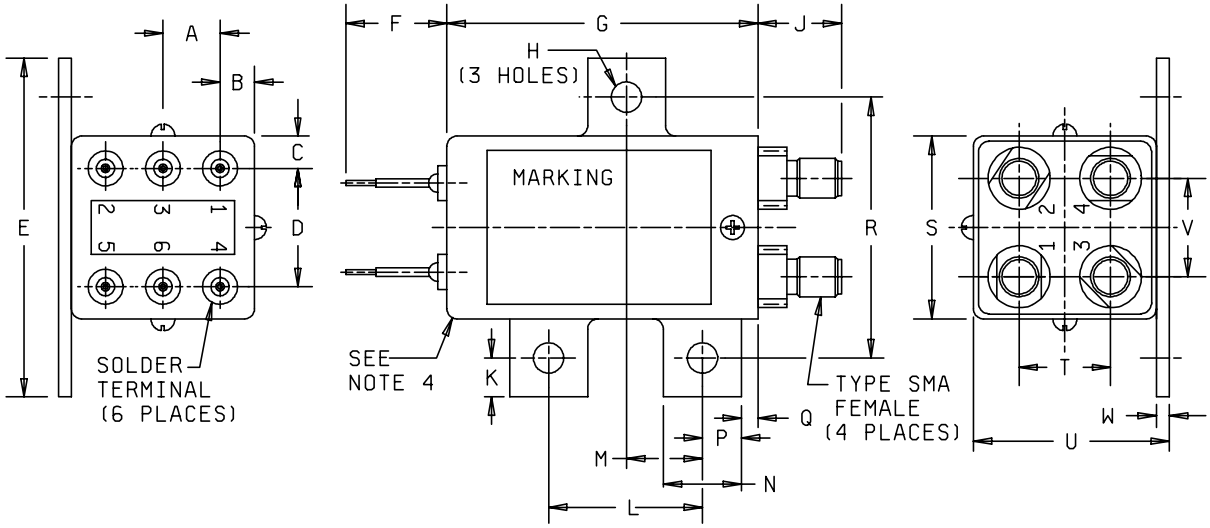

FIGURE 6. PIN M3928/19-07.

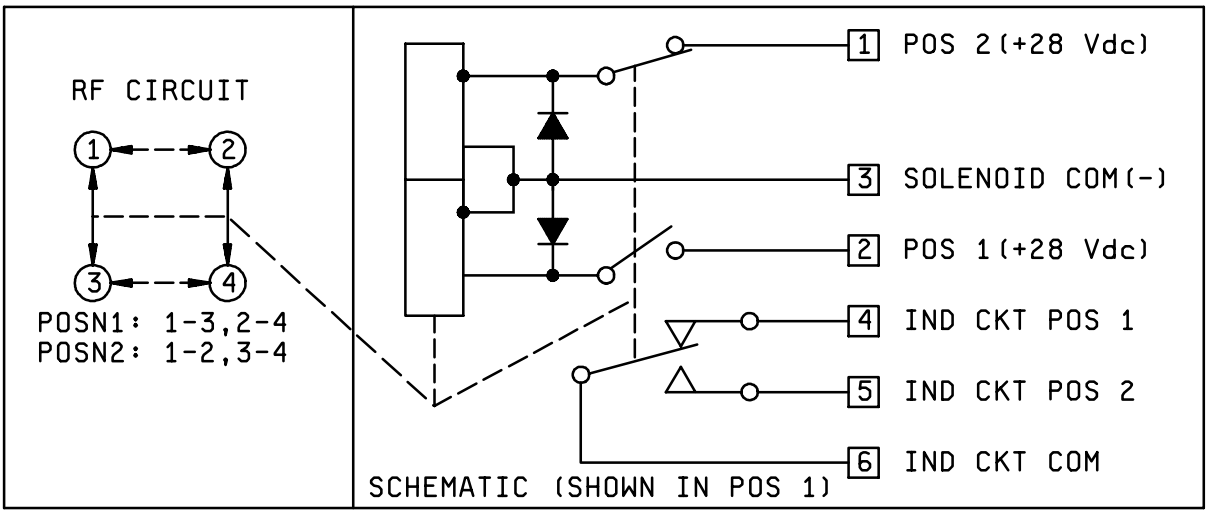

Dimensions									
Letter	Inches		Millimeters		Letter	Inches		Millimeters	
	Max	Min	Max	Min		Max	Min	Max	Min
A	.34	.28	8.6	7.1	M	.553	.537	14.05	13.64
B	.35	.29	8.9	7.4	N	.53	.47	13.5	11.9
C	.35	.29	8.9	7.4	P	.28	.22	7.1	5.6
D	.65	.59	16.5	15.0	Q	.015	---	.38	---
E	2.18	2.14	55.4	54.4	R	1.788	1.772	45.4	45.0
F	.30	---	7.6	---	S	1.30	---	33.0	---
G	1.85	---	47.0	---	T	.644	---	16.36	---
H	.154	.144	3.91	3.66	U	1.37	---	34.8	---
J	.35	---	8.9	---	V	.644	---	16.36	---
K	.22	.16	5.6	4.1	W	.066	.060	1.68	1.52
L	1.098	1.082	27.89	27.49					

NOTES:
1. Dimensions are in inches.
2. Metric equivalents are given for general information only (1.00 inch = 25.4 mm).
3. Unless otherwise specified, tolerances are ± .010 (± 0.25 mm) for three place decimals and ± .03 (±0.8 mm) for two place decimals.
4. Round corners of case may be squared.

FIGURE 6. PIN M3928/19-07 - Continued.

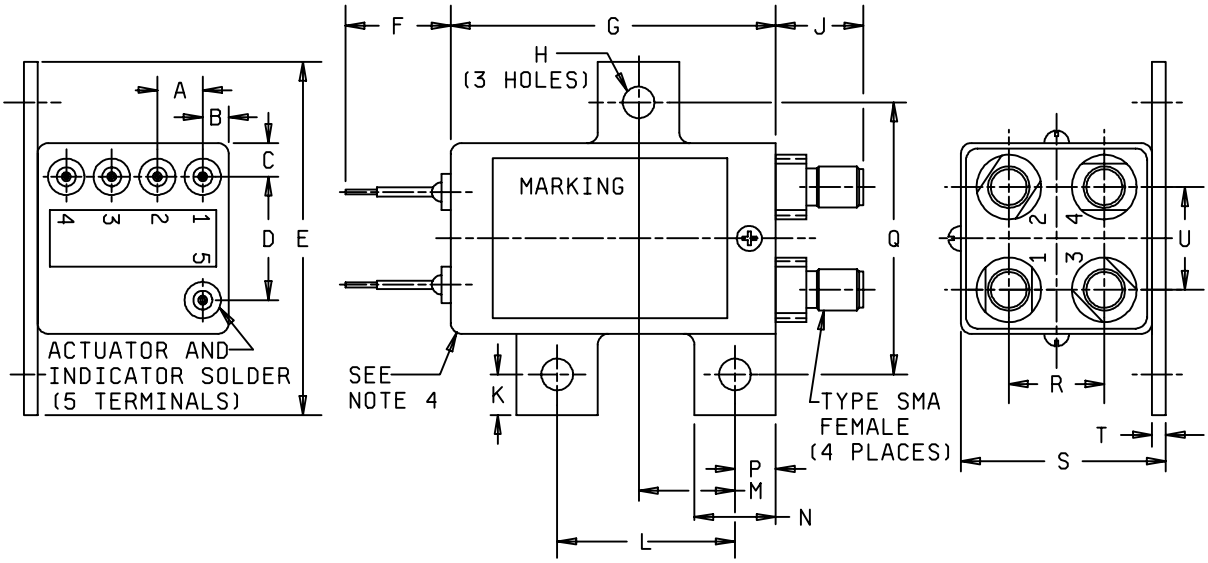

FIGURE 7. PIN M3928/19-10.

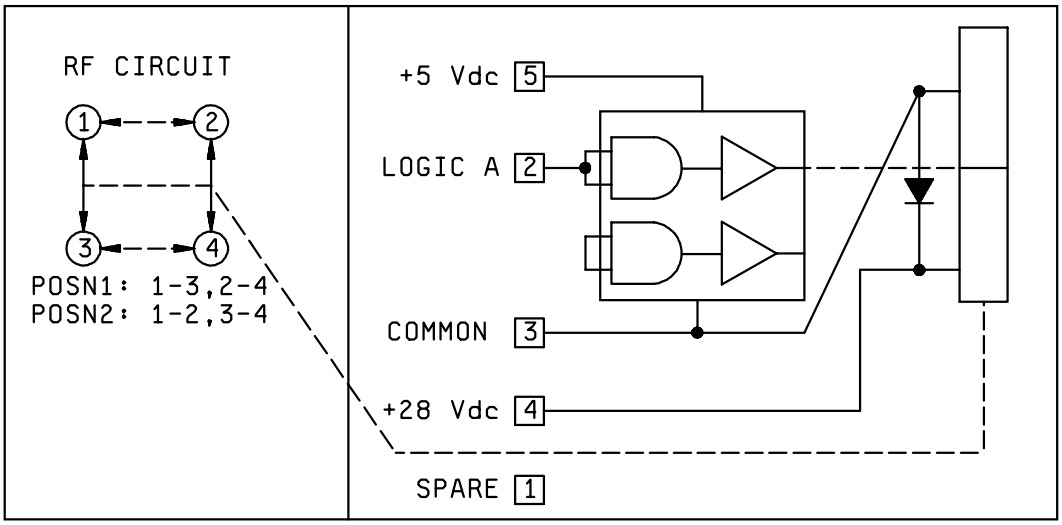

Logic truth table	
RF position	Logic signal A
Pos 1	0
Pos 2	1

Dimensions									
Letter	Inches		Millimeters		Letter	Inches		Millimeters	
	Max	Min	Max	Min		Max	Min	Max	Min
A	.28	.22	7.1	5.6	L	1.098	1.082	27.89	27.48
B	.28	.22	7.1	5.6	M	.553	.537	14.05	13.64
C	.35	.29	8.9	7.4	N	.53	.47	13.5	11.9
D	.65	.59	16.5	15.0	P	.28	.22	7.1	5.6
E	2.18	2.14	55.4	54.4	Q	1.788	1.772	45.4	45.0
F	.46	---	11.7	---	R	.644	---	16.36	---
G	2.20	---	55.9	---	S	1.37	---	34.8	---
H	.154	.144	3.91	3.66	T	.066	.060	1.68	1.52
J	.43	---	10.9	---	U	.644	---	16.36	---
K	.22	.16	5.6	4.1					

NOTES:
1. Dimensions are in inches.
2. Metric equivalents are given for general information only (1.00 inch = 25.4 mm).
3. Unless otherwise specified, tolerances are ± .010 (± 0.25 mm) for three place decimals and ± .03 (±0.8 mm) for two place decimals.
4. Round corners of case may be squared.

FIGURE 7. PIN M3928/19-10 - Continued.

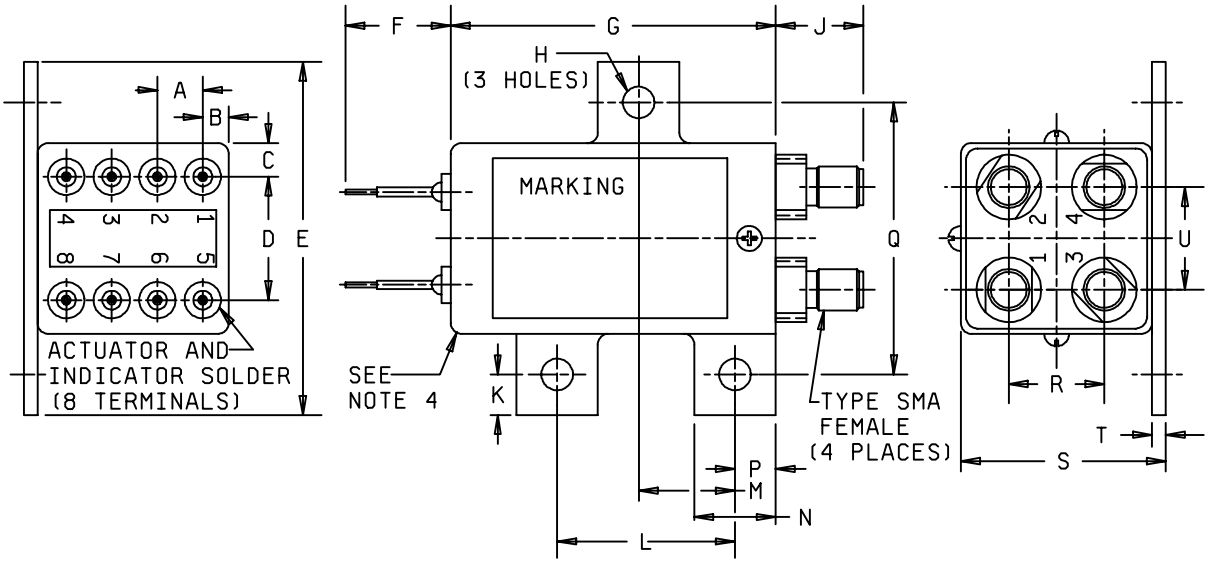

FIGURE 8. PIN M3928/19-11.

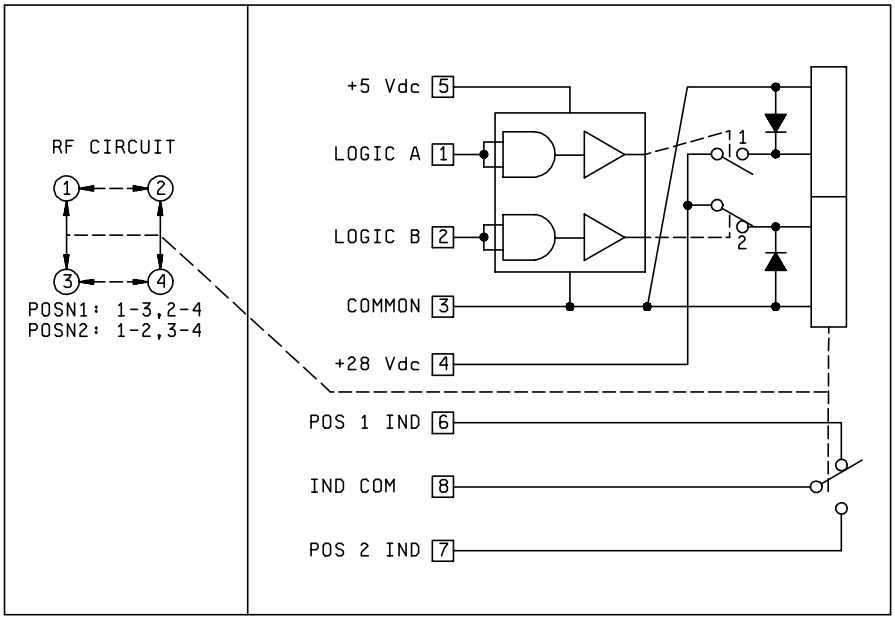

Logic truth table		
RF position	Logic signal	
	A	B
Pos 1	1	0
Pos 2	0	1

Dimensions									
Letter	Inches		Millimeters		Letter	Inches		Millimeters	
	Max	Min	Max	Min		Max	Min	Max	Min
A	.28	.22	7.1	5.6	L	1.098	1.082	27.89	27.48
B	.28	.22	7.1	5.6	M	.553	.537	14.05	13.64
C	.35	.29	8.9	7.4	N	.53	.47	13.5	11.9
D	.65	.59	16.5	15.0	P	.28	.22	7.1	5.6
E	2.18	2.14	55.4	54.4	Q	1.788	1.772	45.4	45.0
F	.46	---	11.7	---	R	.644	---	16.36	---
G	2.20	---	55.9	---	S	1.37	---	34.8	---
H	.154	.144	3.91	3.66	T	.066	.060	1.68	1.52
J	.43	---	10.9	---	U	.644	---	16.36	---
K	.22	.16	5.6	4.1					

NOTES:
1. Dimensions are in inches.
2. Metric equivalents are given for general information only (1.00 inch = 25.4 mm).
3. Unless otherwise specified, tolerances are ± .010 (± 0.25 mm) for three place decimals and ± .03 (±0.8 mm) for two place decimals.
4. Round corners of case may be squared.

FIGURE 8. PIN M3928/19-11 - Continued.

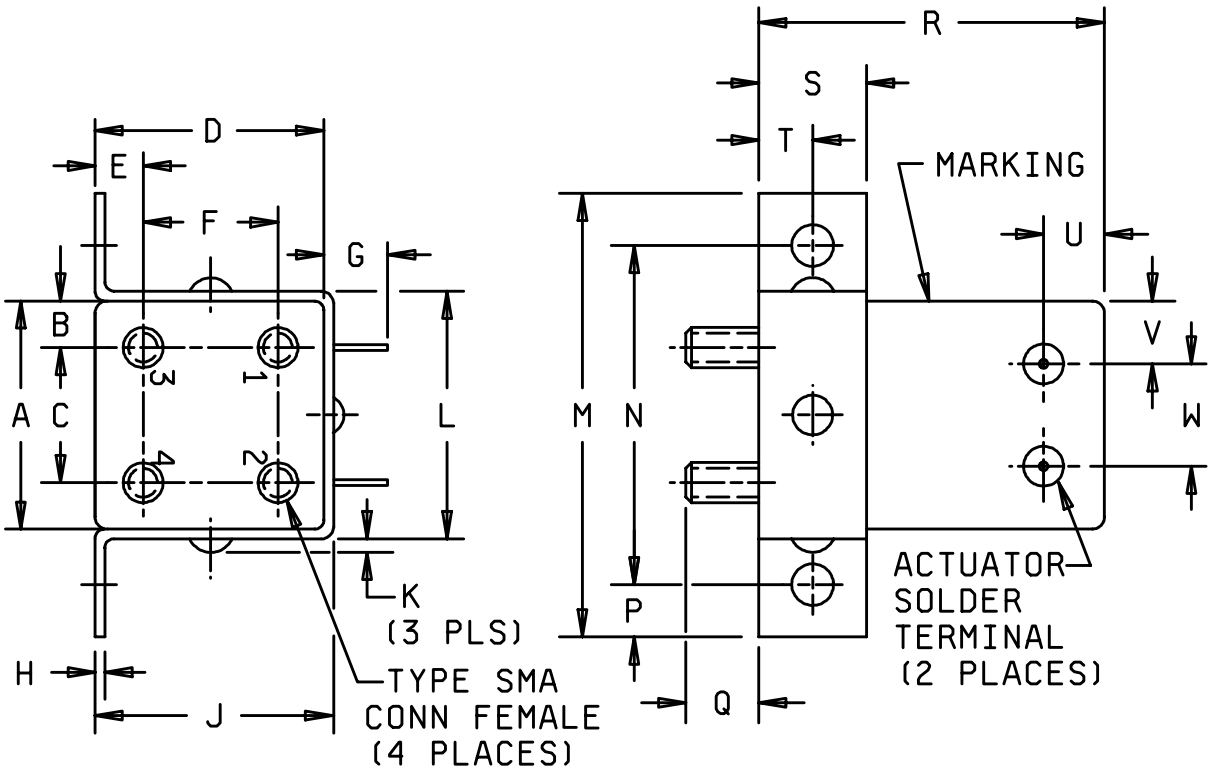

FIGURE 9. PIN M3928/19-12.

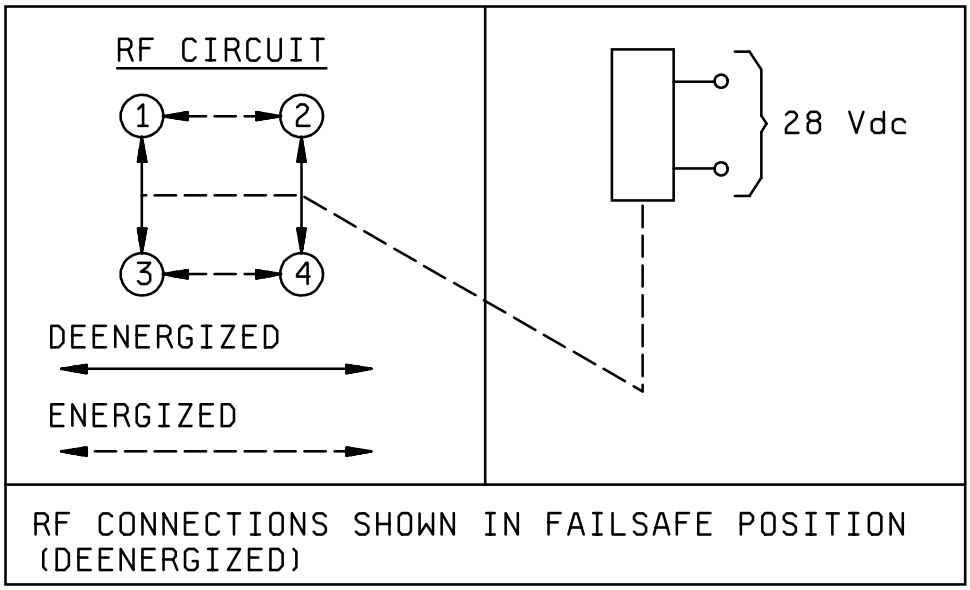

Dimensions									
Letter	Inches		Millimeters		Letter	Inches		Millimeters	
	Max	Min	Max	Min		Max	Min	Max	Min
A	1.03	.97	26.2	24.6	M	2.03	1.97	51.6	50.0
B	.30	.24	7.6	6.1	N	1.635	1.615	41.5	41.0
C	.49	.43	12.4	10.9	P	.22	.16	5.6	4.1
D	1.03	.97	26.2	24.6	Q	.40	.34	10.2	8.6
E	.30	.24	7.6	6.1	R	1.65	---	41.9	---
F	.49	.43	12.4	10.9	S	.53	.47	13.5	11.9
G	.35	---	8.9	---	T	.28	.22	7.1	5.6
H	.09	.03	2.3	0.8	U	.41	.35	10.4	8.9
J	1.072	1.052	27.23	26.72	V	.28	.22	7.1	5.6
K	.08	---	2.0	---	W	.53	.47	13.5	11.9
L	1.135	1.115	28.83	28.32					

NOTES:
1. Dimensions are in inches.
2. Metric equivalents are given for general information only (1.00 inch = 25.4 mm).
3. Unless otherwise specified, tolerances are ± .010 (± 0.25 mm) for three place decimals and ± .03 (±0.8 mm) for two place decimals.
4. Round corners of case may be squared.

FIGURE 9. PIN M3928/19-12 - Continued.

TABLE I. Electrical and performance characteristics.

PIN M3928/19-	Fig. No.	Hous -ing	Frequen- cy range dc to GHz	VSWR	Insertion loss (dB)	Isolation (dB)	Switch- ing time (ms)	Position indication circuit and rating	Life cycles x 1000	Fail-safe or latching	Operating current (A) 1/	Holding current (A) 1/	Nominal operating voltage	Pickup voltage	Dropout voltage	Power and indicator connector	Weight (oz)
				Max	Max	Min	Max				Max	Max					Max
02N, S	2	E	12.4	1.5:1	0.5	50	20	None	100	F	1.3	.35	28 V dc	18 V dc	5 V dc	Solder terminal	6
03N, S	3	E	18	1.5:1	0.5	60	20	Yes	100	F	.175	.06	28 V dc	20 V dc	5 V dc	Solder terminal	10
04N, S 4/	4	I	12.4	1.5:1	0.5	60	50	None	1000	F	.30	.30	28 V dc	20 V dc	2 V dc	Solder terminal	14
05N, S 3/	5	I	12.4	1.5:1	0.5	60	20	Yes	100	F	2.0	.12	28 V dc	20 V dc	10 V dc	Solder terminal	4
06N, S 5/	6	I	18	1.5:1	0.5	60	10	Yes	1000	L	.030	0	115 V ac	N/A	N/A	N/A	2.5
07N, S	7	E	18	1.5:1	0.5	60	20	Yes	100	L	.75	0	28 V dc	20 V dc	---	Solder terminal	6
08N, S	2	E	18	1.5:1	0.5	60	20	None	100	F	1.3	.35	28 V dc	18 V dc	5 V dc	Solder terminal	6
09N, S	5	E	18	1.5:1	0.5	60	20	Yes	100	F	2.0	.12	28 V dc	20 V dc	10 V dc	Solder terminal	4
10N, S 6/	8	E	18	1.5:1	0.5	60	20	None	100	F	1.3	.35	28 V dc +5 V dc 7/	18 V dc	5 V dc	Solder terminal	7
11N, S 6/	9	E	18	1.5:1	0.5	60	20	Yes	100	L	1.0	0	28 V dc +5 V dc 7/	20 V dc	---	Solder terminal	7
12 N, S	10	E	18	1.5:1	0.5	60	20	None	100	F	1.0	.2	28 V dc	20 V dc	16 V dc	Solder terminal	4
13 N, S	2	E	20 8	1.8:1 1.5:1 at 18 GHz 1.3:1	0.7 0.5 at 18 GHz 0.3	40 60 at 18 GHz 70	20	None	100	F	1.3	.95	28 V dc	18 V dc	5 V dc	Solder terminal	6
14N, S	5	E	20	1.8:1 1.5:1 at 18 GHz	0.7 0.5 at 18 GHz	40 60 at 18 GHz	20	Yes	100	F	2.0	.12	28 V dc	20 V dc	5 V dc	Solder terminal	6

1/ M3928/19-01 has been deleted.
2/ At nominal V dc and 20 deg C.
3/ Transient interference (RFI).
4/ Explosion proof. 25 watts at 1 GHz into a 50-ohm load.
5/ Switch does not provide self cutoff of operating voltage after switching.
6/ Logic voltage: Logic 0 - 0 to 0.4 V dc.
Logic 1 - 2.4 to 5.5 V dc.
7/ +5 voltage deviation: ± 0.5 V dc.

REQUIREMENTS:

Dimensions and configurations: See figures 1 through 9.

RF connectors: Female connectors (4 places) shall meet the requirements of MIL-PRF-39012 and shall mate with SMA type male connectors in accordance with MIL-PRF-39012/55.

Electrical and performance characteristics: See table I.

RF power handling capability (average): 25 watts (minimum).

Nominal impedance: 50 ohms.

Termination: Open.

Vibration: Method I.

Operating temperature: -55 deg C to +85 deg C.

Part or Identifying Number (PIN): M3928/19- (and dash number from table I).

Revision letters are not used in this revision to identify changes with respect to the previous issue, due to the extensiveness of the changes.

Custodians:
Army - CR
Navy - EC
Air Force - 11
DLA - CC

Review activities:
Army - AV, MI
Navy - AS, MC, OS, SH
Air Force - 19, 99

Preparing activity:
DLA - CC

(Project 5985-1209-10)