FED SUP CLASS
5930

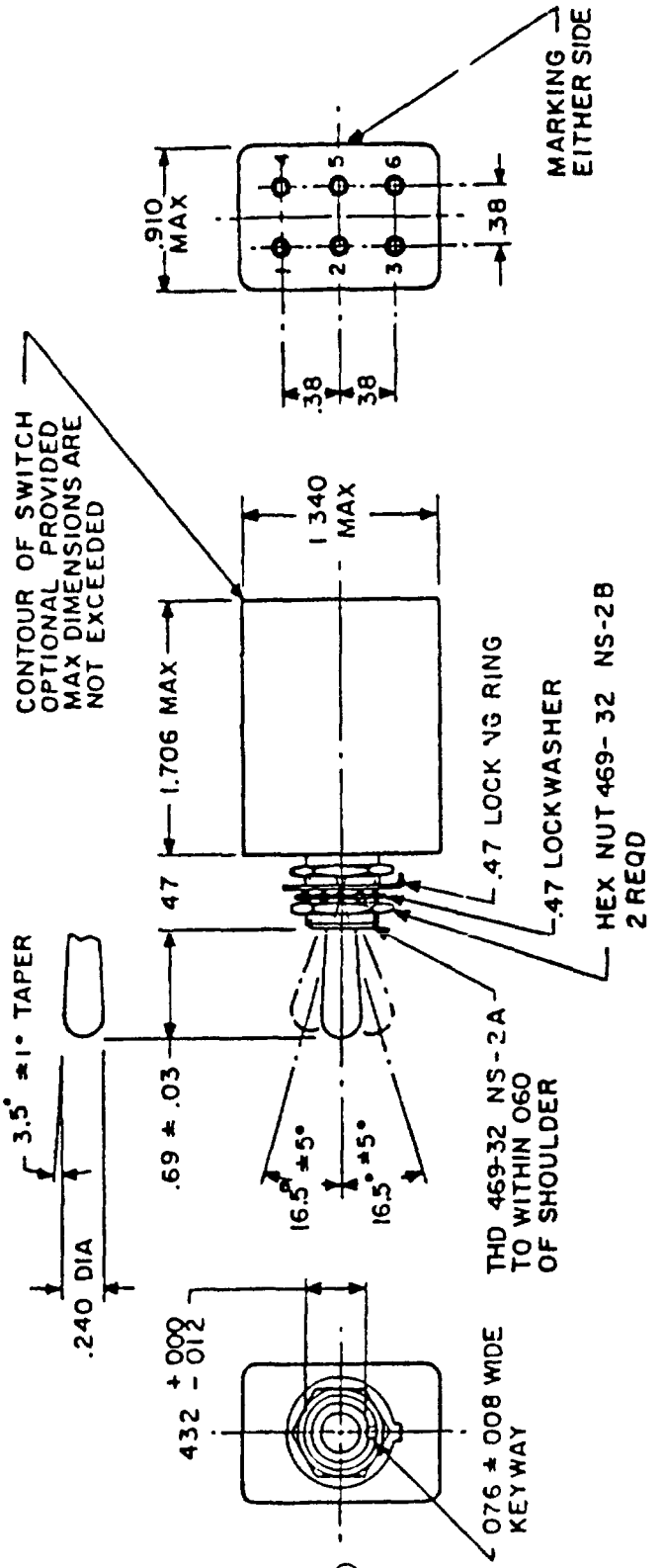

© Denotes changes

APPROVED 30 Jan 1970 REVISED (A) 22 Apr 1971 (B) 25 Apr 1975 (C) 28 Sep 1987

P A Air Force - B5 Other Cust Army - ER Navy - AS	International interest	TITLE SWITCH, TOGGLE, TWO POLE, ENVIRONMENTALLY SEALED, INTEGRATED WIRE TERMINALS	MILITARY STANDARD MS27723
Procurement Specification MIL-S-3950		SUPERSEDES	PAGE 1 OF 3

DD FORM 1 MAY 73 672 (Coordinated) PREVIOUS EDITIONS OF THIS FORM ARE OBSOLETE 5930-1358-12

AMSC N/A

DISTRIBUTION STATEMENT A Approved for public release, distribution is unlimited

This military standard is approved for use by all Departments and Agencies of the Department of Defense. Selection for all new engineering and design applications and for repetitive use shall be made from this document when applicable

Review activities: Army - AV, Navy - FC, Air Force - 99, DLA - ES

User activity: Air Force - 11

Inches	mm	Inches	mm
.008	0.20	.432	10.97
.012	0.30	.469	11.91
.03	0.8	.47	11.9
.076	1.93	.69	17.5
.240	6.10	.910	23.11
.38	9.65	1.340	34.04
		1.706	43.33

NOTES:

1. Dimensions are inches.
2. Metric equivalents are given for general information only.
3. Unless otherwise specified, tolerance is ±.020 (0.51 mm) for two place decimals and ±.005 (0.13 mm) for three place decimals.
4. For hardware detail specifications, see appendix of MIL-S-3950
5. (C) Contact installing/removal tool in accordance with M81969/14-03.
6. (C) Grommet sealing plug, in accordance with MS27488A16.
7. The sealing grommet shall seal on a smooth wire insulation of .068 (1 73 mm) to .103 (2.62 mm) diameters.
8. (C) Terminal shall adequately accept a wire contact within dimensional limits of M39029/1-102
9. The terminal end of switch shall be color coded blue to indicate contact size
10. Direction of internal mechanism movement is opposite to the direction of the toggle movement.
11. Sealing plugs may be used in nonfunctional grommet holes.
12. Maximum weight is .135 pound.
13. (C) In the event of a conflict between the text of this standard and the reference cited herein, the text of this standard shall take precedence.
14. (C) Referenced Government documents of the issue listed in that issue of the Department of Defense Index of Specifications and Standards (DODISS) specified in the solicitation form a part of this standard to the extent specified herein.

For changes see page 2

APPROVED 30 Jan 1970 REVISED (1)

This military standard is approved for use by all Departments and Agencies of the Department of Defense. Selection for all new engineering and design applications and for repetitive use shall be made from this document when applicable

Review activities: Army - AV, Navy - EC, Air Force - 99, DLA - ES

User activity: Air Force - 11

P A	International interest	TITLE	MILITARY STANDARD
Air Force - 85 Other Cust Army - ER Navy - AS		SWITCH, TOGGLE, TWO POLE, ENVIRONMENTALLY SEALED, INTEGRATED WIRE TERMINALS	MS27723
Procurement Specification MIL-S-3950		SUPERSEDES	PAGE 2 OF 3

Detail requirements

MS part number	Circuit with toggle lever in			Current capacity (amperes) 28 volts dc			Current capacity (amperes) 115 volts, 60 and 400 hertz ac		
	Keying side	Center	Opposite keying side	Lamp-load circuit	Resistive circuit	Inductive circuit	Lamp-load circuit	Resistive circuit	Inductive circuit
MS27723-1	1-2 On 4-5	1-2 On 5-6	2-3 On 5-6	7	20	15	4	15	15
MS27723-2	Mom. 1-2 on 4-5	1-2 On 5-6	2-3 On 5-6	5	18	10	2	11	8
MS27723-3	Mom. 1-2 on 4-5	1-2 On 5-6	Mom. 2-3 on 5-6						
MS27723-21	1-2 On 4-5	Off	2-3 On 5-6	7	20	15	4	15	15
MS27723-22	Off	None	2-3 On 5-6						
MS27723-23	1-2 On 4-5	None	2-3 On 5-6						
MS27723-24	None	Off	2-3 On 5-6						
MS27723-25	None	Mom. off	2-3 On 5-6	5	18	10	2	11	8
MS27723-26	Mom. 1-2 on 4-5	None	2-3 On 5-6						
MS27723-27	Mom. 1-2 on 4-5	Off	Mom. 2-3 on 5-6						
MS27723-28	Mom. 1-2 on 4-5	Off	None						
MS27723-29	Mom. off	None	2-3 On 5-6						
MS27723-30	Mom. 1-2 on 4-5	None	Off						
MS27723-31	Mom. 1-2 on 4-5	Off	2-3 On 5-6						
MS27723-32	None	1-2 On 4-5	Mom. 2-3 on 5-6						
MS27723-33	None	1-2 On 4-5	2-3 On 5-6	7	20	15	4	15	15

Test requirements:

Test shall be performed in accordance with MIL-S-3950 except.

a. During all tests, switches shall be fully wired with appropriate wire and terminal contacts.
b. Contact voltage drop - the contact voltage drop with two terminals and the switch contact in series shall not exceed 8 millivolts measured from one wire contact through the contacts to the other wire contacts.