INCH-POUND

MIL-W-3970/22
w/AMENDMENT 1
25 February 2004
SUPERSEDING
MIL-W-3970/22
30 August 1978

MILITARY SPECIFICATION SHEET

WAVEGUIDE ASSEMBLIES, RIGID, CAST, 90-DEGREE E-PLANE BEND, FULL CORRAL

This specification is approved for use by all Departments and Agencies of the Department of Defense.

THIS SPECIFICATION IS INACTIVE FOR NEW DESIGN AFTER 18 SEPTEMBER 1998.

The requirements for acquiring the product described herein shall consist of this document and MIL-DTL-3970.

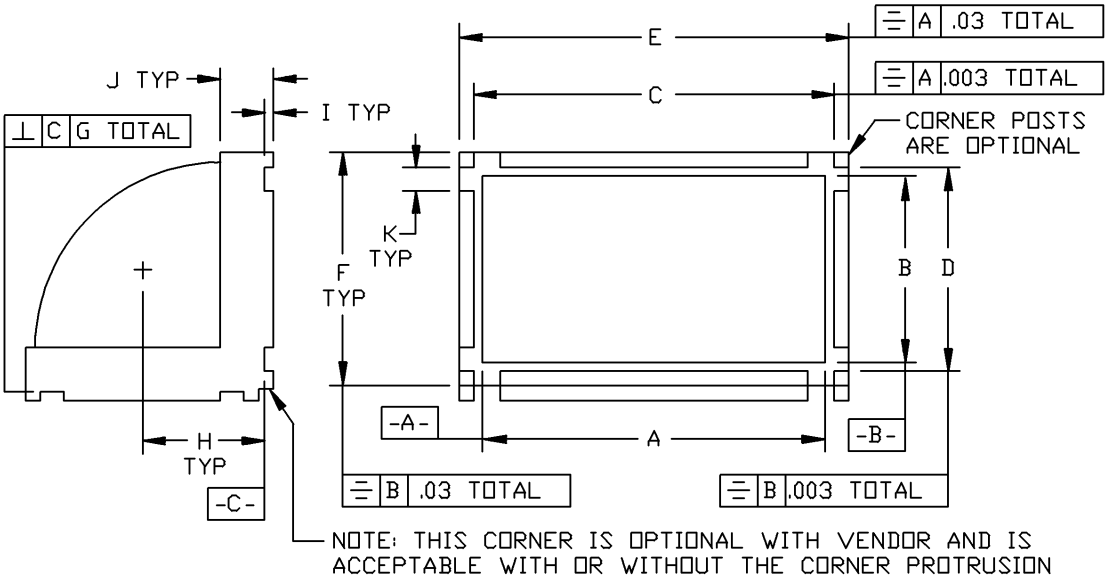

FIGURE 1. Dimensions for configuration 1, for dash numbers 001, 002, 003, 006, 007, 008, 009, 012, 013, 016, and 017.

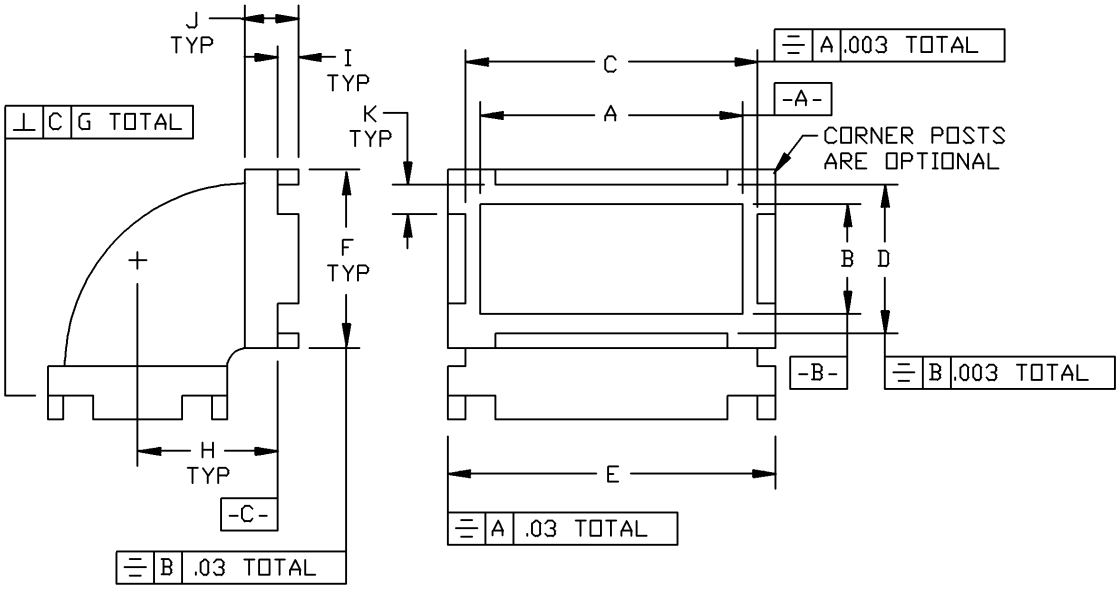

FIGURE 2. Dimensions for configuration 2, for dash numbers 010 and 011.

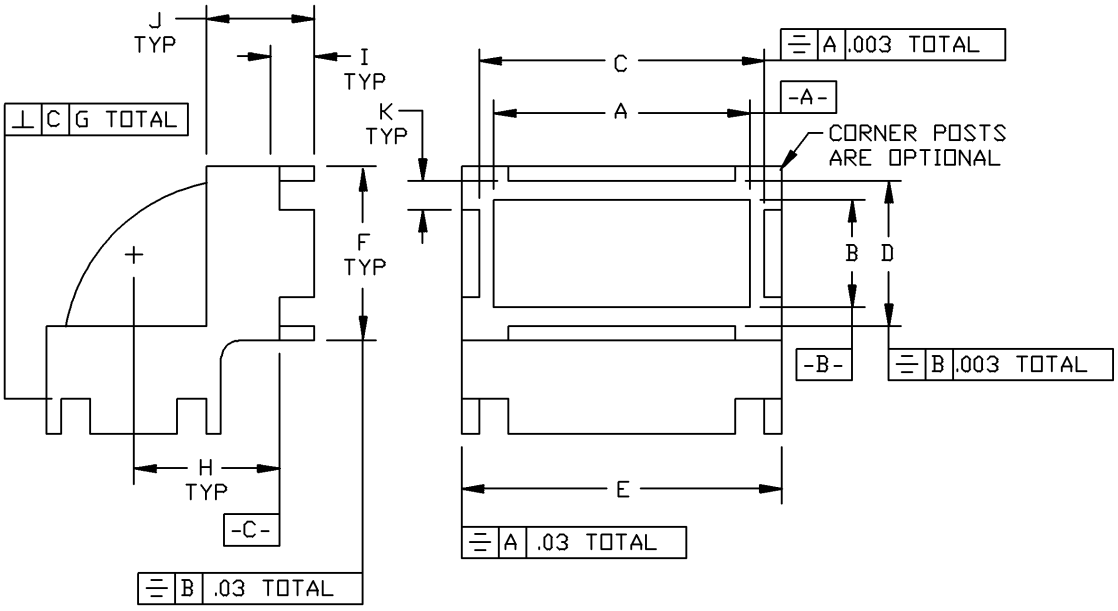

FIGURE 3. Dimensions for configuration 3, for dash numbers 014 and 015.

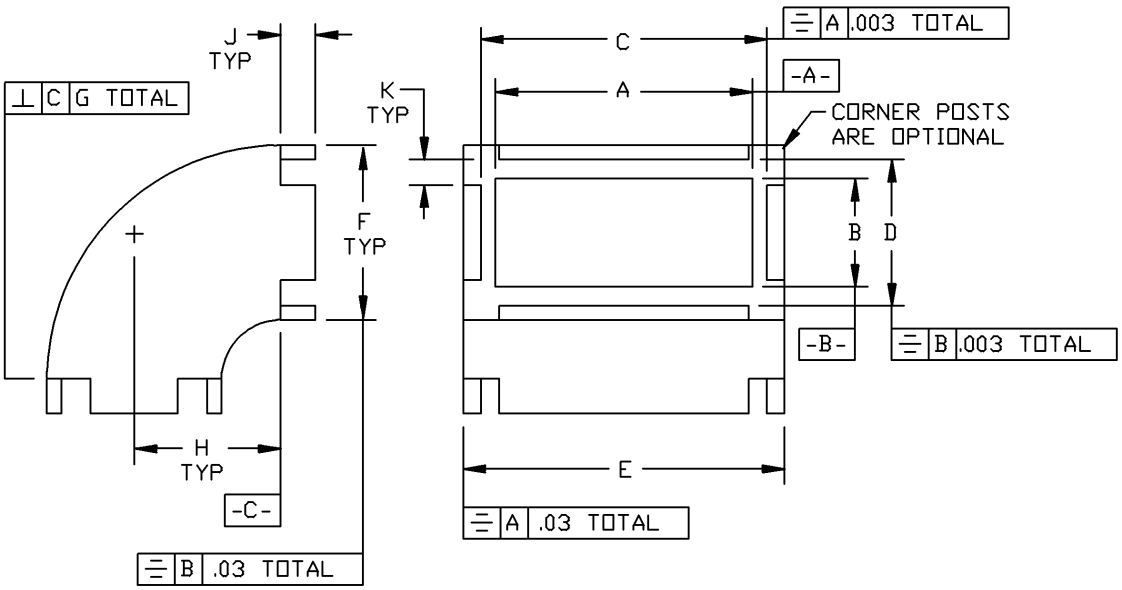

FIGURE 4. Dimensions for configuration 4, for dash numbers 004 and 005.

TABLE I. Dash number, electrical and physical characteristics, and material.

Dash no.	Frequency range TE_{10} mode GHz	VSWR max	Peak power kW max	Average power kW max	Operating temperature range	Pressur-ization lb_f/in^2	Material
001	3.95 - 5.85	1.05	250	10	-55° to +300°C	45	Aluminum alloy, D712.0, temper F, in accordance with ASTM-B26/B26M or C712.1 in accordance with ASTM-B179
002	7.05 - 10.0	1.05	1/	1/	0° to 60°C	45	Beryllium copper alloy
003	7.05 - 10.0	1.05	250	10	-55° to +300°C	45	Aluminum alloy, D712.0, temper F, in accordance with ASTM-B26/B26M or C712.1 in accordance with ASTM-B179
004	7.05 - 10.0	1.05	1/	1/	0° to 60°C	45	Beryllium copper alloy
005	7.05 - 10.0	1.05	250	10	-55° to +300°C	45	Aluminum alloy, D712.0, temper F, in accordance with ASTM-B26/B26M or C712.1 in accordance with ASTM-B179
006	8.2 - 12.4	1.05	1/	1/	0° to 60°C	45	Beryllium copper alloy
007	8.2 - 12.4	1.05	250	10	-55° to +300°C	45	Aluminum alloy, D712.0, temper F, in accordance with ASTM-B26/B26M or C712.1 in accordance with ASTM-B179
008	8.2 - 12.4	1.05	1/	1/	0° to 60°C	45	Beryllium copper alloy
009	8.2 - 12.4	1.05	250	10	-55° to +300°C	45	Aluminum alloy, D712.0, temper F, in accordance with ASTM-B26/B26M or C712.1 in accordance with ASTM-B179
010	8.2 - 12.4	1.05	1/	1/	0° to 60°C	45	Beryllium copper alloy
011	8.2 - 12.4	1.05	250	10	-55° to +300°C	45	Aluminum alloy, D712.0, temper F, in accordance with ASTM-B26/B26M or C712.1 in accordance with ASTM-B179
012	12.4 - 18.0	1.05	1/	1/	0° to 60°C	45	Beryllium copper alloy
013	12.4 - 18.0	1.05	250	10	-55° to +300°C	45	Aluminum alloy, D712.0, temper F, in accordance with ASTM-B26/B26M or C712.1 in accordance with ASTM-B179
014	12.4 - 18.0	1.05	1/	1/	0° to 60°C	45	Beryllium copper alloy
015	12.4 - 18.0	1.05	250	10	-55° to +300°C	45	Aluminum alloy, D712.0, temper F, in accordance with ASTM-B26/B26M or C712.1 in accordance with ASTM-B179
016	26.5 - 40.0	1.05	1/	1/	0° to 60°C	45	Beryllium copper alloy
017	26.5 - 40.0	1.05	250	10	-55° to +300°C	45	Aluminum alloy, D712.0, temper F, in accordance with ASTM-B26/B26M or C712.1 in accordance with ASTM-B179

1/ The assemblies shall have a power capability of 80 percent of the mating waveguide average power at sea level pressure.

TABLE II. Dimensions, figures, and mating waveguides.

Dash no.	A	B	C	D	E	F	G TOL	H	I	J	K	FIGURE	Mating Waveguide M85/
	Dimensions 1/ 2/												
001	1.875 ± .005	.872 ± .005	2.005 +.005 -.000	1.005 +.005 -.000	2.18 ± .03	1.18 ± .03	± .009	.593 ± .010	.06 ± .01	.18 ± .01	.180 ± .006	1	1-053 1-054 1-174
002	1.222 ± .004	.497 ± .004	1.252 +.003 -.000	.627 +.003 -.000	1.36 ± .03	.74 ± .03	± .005	.593 ± .010	.06 ± .01	.18 ± .01	.112 ± .004	1	1-069 1-073
003	1.222 ± .004	.497 ± .004	1.252 +.003 -.000	.627 +.003 -.000	1.36 ± .03	.74 ± .03	± .005	.593 ± .010	.06 ± .01	.18 ± .01	.112 ± .004	1	1-071 1-072 1-177
004	1.222 ± .004	.497 ± .004	1.252 +.003 -.000	.627 +.003 -.000	1.343 ± .010	.718 ± .010	± .005	.593 ± .010	.06 ± .01	.18 ± .01	.112 ± .004	4	1-069 1-073
005	1.222 ± .004	.497 ± .004	1.252 +.003 -.000	.627 +.003 -.000	1.343 ± .010	.718 ± .010	± .005	.593 ± .010	.06 ± .01	.18 ± .01	.112 ± .004	4	1-071 1-072 1-177
006	.900 ± .003	.400 ± .003	1.002 +.003 -.000	.502 +.003 -.000	1.15 ± .03	.65 ± .03	± .004	.453 ± .010	.06 ± .01	.18 ± .01	.090 ± .003	1	1-075 1-079
007	.900 ± .003	.400 ± .003	1.002 +.003 -.000	.502 +.003 -.000	1.15 ± .03	.65 ± .03	± .004	.453 ± .010	.06 ± .01	.18 ± .01	.090 ± .003	1	1-077 1-078 1-178
008	.900 ± .003	.400 ± .003	1.003 +.003 -.000	.503 +.003 -.000	1.125 ± .010	.625 ± .010	± .004	.328 ± .010	.06 ± .01	.18 ± .01	.090 ± .003	1	1-075 1-079
009	.900 ± .003	.400 ± .003	1.003 +.003 -.000	.503 +.003 -.000	1.125 ± .010	.625 ± .010	± .004	.328 ± .010	.06 ± .01	.18 ± .01	.090 ± .003	1	1-077 1-078 1-178

See footnotes on page 6.

Inches	mm	Inches	mm	Inches	mm	Inches	mm	Inches	mm	Inches	mm
.000	.00	.01	.3	.328	8.33	.625	15.88	1.002	25.45	1.252	31.80
.003	.08	.03	.8	.400	10.16	.627	15.93	1.003	25.48	1.343	34.11
.004	.10	.06	1.5	.453	11.51	.65	16.5	1.005	25.53	1.36	34.5
.005	.13	.090	2.29	.497	12.62	.718	18.24	1.122	28.50	1.875	47.62
.006	.15	.112	2.84	.502	12.75	.74	18.8	1.125	28.58	2.005	50.93
.009	.23	.180	4.57	.503	12.78	.872	22.15	1.15	29.2	2.18	55.37
.010	.25	.18	4.6	.593	15.06	.900	22.86	1.18	30.0		

TABLE II. Dimensions, figures, and mating waveguides - Continued.

Dash no.	Dimensions 1/ 2/ A	B	C	D	E	F	G TOL	H	I	J	K	FIGURE	Mating Waveguide M85/
010	.900 ± .003	.400 ± .003	1.003 +.003 -.000	.503 +.003 -.000	1.125 ± .010	.625 ± .010	± .004	.453 ± .010	.06 ± .01	.18 ± .01	.090 ± .003	2	1-075 1-079
011	.900 ± .003	.400 ± .003	1.003 +.003 -.000	.503 +.003 -.000	1.125 ± .010	.625 ± .010	± .004	.453 ± .010	.06 ± .01	.18 ± .01	.090 ± .003	2	1-077 1-078 1-178
012	.622 ± .002	.311 ± .002	.704 +.003 -.000	.393 +.003 -.000	.80 ± .03	.58 ± .03	± .003	.406 ± .010	.06 ± .01	.18 ± .01	.063 ± .002	1	1-087 1-089
013	.622 ± .002	.311 ± .002	.704 +.003 -.000	.393 +.003 -.000	.80 ± .03	.58 ± .03	± .003	.406 ± .010	.06 ± .01	.18 ± .01	.063 ± .002	1	1-090 1-091 1-180
014	.622 ± .002	.311 ± .002	.705 +.003 -.000	.394 +.003 -.000	.812 ± .010	.500 ± .010	± .003	.406 ± .010	.06 ± .01	.18 ± .01	.063 ± .002	3	1-087 1-089
015	.622 ± .002	.311 ± .002	.705 +.003 -.000	.394 +.003 -.000	.812 ± .010	.500 ± .010	± .003	.406 ± .010	.06 ± .01	.18 ± .01	.063 ± .002	3	1-090 1-091 1-180
016	.280 ± .0015	.140 ± .0015	.362 +.002 -.000	.222 +.002 -.000	.437 ± .010	.296 ± .010	± .002	.140 ± .010	.04 ± .01	.12 ± .01	.033 ± .001	1	3-007 3-008
017	.280 ± .0015	.140 ± .0015	.362 +.002 -.000	.222 +.002 -.000	.437 ± .010	.296 ± .010	± .002	.140 ± .010	.04 ± .01	.12 ± .01	.033 ± .001	1	3-009

NOTES:
1/ Dimensions are in inches and in accordance with ASME Y14.5M.
2/ Metric equivalents are given for general information only and are based on 1.00 inch = 25.4 mm.

Inches	mm	Inches	mm	Inches	mm	Inches	mm	Inches	mm	Inches	mm
.000	.00	.03	.8	.140	3.56	.393	9.98	.503	12.78	.812	20.62
.0015	.038	.033	.84	.18	4.6	.394	10.01	.58	14.7	.900	22.86
.002	.05	.04	1.0	.222	5.64	.400	10.16	.622	15.80	1.003	25.48
.003	.08	.063	1.60	.280	7.11	.406	10.31	.625	15.88	1.125	28.58
.004	.10	.06	1.5	.296	7.52	.437	11.10	.704	17.88		
.010	.25	.090	2.29	.311	7.90	.453	11.51	.705	17.91		
.01	.3	.12	3.0	.362	9.19	.500	12.70	.80	20.3		

REQUIREMENTS:

Physical characteristics.

Dimensions and configuration: See figures 1, 2, 3, and 4, and tables I and II.

Material: See table I.

Surfaces (sandblasting after machining permissible):

Internal: $63\sqrt{}$ microinches in accordance with ASME-B46.1.

External: $125\sqrt{}$ microinches in accordance with ASME-B46.1.

Fungus resistance: Materials nutrient to fungus shall not be used.

Pressurization: See table I.

Penetrant inspection. No indication of any cracks at any location when tested in accordance with MIL-STD-6866, type I, method B.

Electrical characteristics:

Frequency range: See table I.

VSWR: See table I.

Power:
Peak - See table I.
Average - See table I.

Part or Identifying Number (PIN): M3970/22 - (dash number from table I).

NOTES

Referenced documents. In addition to MIL-DTL-3970, this specification sheet references MIL-DTL-85/1, MIL-DTL-85/3, ASTM-B26/B26M, ASTM-B179, ASME-B46.1, ASME Y14.5M, and MIL-STD-6866.

Changes from previous issue. The margins of this specification sheet are marked with vertical lines to indicate modifications generated by this amendment. This was done as a convenience only and the Government assumes no liability whatsoever for any inaccuracies in these notations. Bidders and contractors are cautioned to evaluate the requirements of this document based on the entire content irrespective of the marginal notations.

Custodians:
Army - CR
Navy - EC
Air Force - 11
DLA - CC

Preparing activity:
DLA - CC

(Project 5985-1285-02)

Review activities:
Army - MI
Navy - AS, CG, MC, OS
Air Force - 19, 99

NOTE: The activities listed above were interested in this document as of the date of this document. Since organizations and responsibilities can change, you should verify the currency of the information above using the ASSIST Online database www.dodssp.daps.mil.