INCH-POUND

MIL-DTL-49055/11C
4 August 2000
SUPERSEDING
MIL-C-49055/11B
16 February 1990

DETAIL SPECIFICATION SHEET

CABLES, SPECIAL PURPOSE, ELECTRICAL, FLEXIBLE, FLAT, UNSHIELDED, ROUND CONDUCTOR, 150 °C

Inactive for new design after 16 June 1997

This specification is approved for use by all Departments and Agencies of the Department of Defense.

The requirements for acquiring the product described herein shall consist of this specification sheet and the issue of MIL-DTL-49055 listed in that issue of the Department of Defense Index of Specifications and Standards (DoDISS) specified in the solicitation.

REQUIREMENTS:

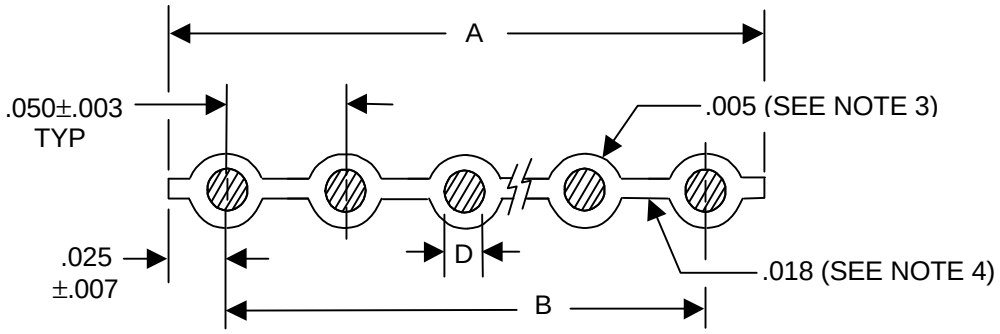

Inches	mm
.003	0.08
.005	0.13
.007	0.18
.018	0.46
.025	0.64
.050	1.27

NOTES:
1. Dimensions are in inches.
2. Metric equivalents are for general information only.
3. Minimum insulation thickness.
4. Maximum web thickness.

FIGURE 1. Round conductor flat cable.

DISTRIBUTION STATEMENT A. Approved for public release; distribution is unlimited.

TABLE I. Dash numbers and characteristics.

Dash no.	No. of Cond.	Cable width "A" inches	Cable thickness inches	Wgt. (lb/1,000 ft)		Conductor			DC resist. 2/	End cond. to end cond. "B" inches
				Nom. 1/	Max.	AWG	Dia"D" inch	Strand		
01	9	.450±.010	.029±.003	10.67	12.10	28	.015	7/36	65.9	.400±.007
02	10	.500±.010	.029±.003	12.30	14.00	28	.015	7/36	65.9	.450±.007
03	14	.700±.010	.029±.003	17.52	19.99	28	.015	7/36	65.9	.650±.007
04	15	.750±.010	.029±.003	19.15	21.89	28	.015	7/36	65.9	.700±.007
05	16	.800±.011	.029±.003	20.14	22.99	28	.015	7/36	65.9	.750±.011
06	20	1.000±.011	.029±.003	25.36	28.97	28	.015	7/36	65.9	.950±.011
07	24	1.200±.011	.029±.003	30.29	34.57	28	.015	7/36	65.9	1.150±.011
08	25	1.250±.011	.029±.003	31.92	36.47	28	.015	7/36	65.9	1.200±.011
09	26	1.300±.011	.029±.003	33.20	37.95	28	.015	7/36	65.9	1.250±.011
10	34	1.700±.015	.029±.003	43.64	49.91	28	.015	7/36	65.9	1.650±.015
11	37	1.850±.015	.029±.003	47.25	54.01	28	.015	7/36	65.9	1.800±.015
12	40	2.000±.015	.029±.003	51.48	58.89	28	.015	7/36	65.9	1.950±.015
13	50	2.500±.015	.029±.003	62.88	72.21	28	.015	7/36	65.9	2.450±.015
14	60	3.000±.020	.029±.003	77.60	88.81	28	.015	7/36	65.9	2.950±.015
15	64	3.200±.020	.029±.003	81.72	93.42	28	.015	7/36	65.9	3.150±.015
16	9	.450±.010	.032±.003	13.77	15.20	26	.019	7/34	41.2	.400±.007
17	10	.500±.010	.032±.003	15.40	17.10	26	.019	7/34	41.2	.450±.007
18	14	.700±.010	.032±.003	21.86	24.33	26	.019	7/34	41.2	.650±.007
19	15	.750±.010	.032±.003	23.80	26.54	26	.019	7/34	41.2	.700±.007
20	16	.800±.011	.032±.003	25.10	27.95	26	.019	7/34	41.2	.750±.011
21	20	1.000±.011	.032±.003	31.56	35.17	26	.019	7/34	41.2	.950±.011
22	24	1.200±.011	.032±.003	38.04	42.14	26	.019	7/34	41.2	1.150±.011
23	25	1.250±.011	.032±.003	39.67	44.24	26	.019	7/34	41.2	1.200±.011
24	26	1.300±.011	.032±.003	41.26	46.01	26	.019	7/34	41.2	1.250±.011
25	34	1.700±.015	.032±.003	54.18	60.45	26	.019	7/34	41.2	1.650±.015
26	37	1.850±.015	.032±.003	58.71	65.48	26	.019	7/34	41.2	1.800±.015
27	40	2.000±.015	.032±.003	63.88	71.29	26	.019	7/34	41.2	1.950±.015
28	50	2.500±.015	.032±.003	80.04	89.37	26	.019	7/34	41.2	2.450±.015
29	60	3.000±.020	.032±.003	96.20	107.41	26	.019	7/34	41.2	2.950±.015
30	64	3.200±.020	.032±.003	101.56	113.26	26	.019	7/34	41.2	3.150±.015
31	9	.450±.010	.038±.003	19.21	20.64	24	.024	7/32	25.4	.400±.007
32	10	.500±.010	.038±.003	20.84	22.54	24	.024	7/32	25.4	.450±.007
33	14	.700±.010	.038±.003	29.48	31.95	24	.024	7/32	25.4	.650±.007
34	15	.750±.010	.038±.003	31.96	34.70	24	.024	7/32	25.4	.700±.007
35	16	.800±.011	.038±.003	33.80	36.65	24	.024	7/32	25.4	.750±.011
36	20	1.000±.011	.038±.003	42.44	46.05	24	.024	7/32	25.4	.950±.011
37	24	1.200±.011	.038±.003	51.64	55.94	24	.024	7/32	25.4	1.150±.011
38	25	1.250±.011	.038±.003	53.27	57.84	24	.024	7/32	25.4	1.200±.011
39	26	1.300±.011	.038±.003	55.40	60.15	24	.024	7/32	25.4	1.250±.011
40	34	1.700±.015	.038±.003	72.68	78.95	24	.024	7/32	25.4	1.650±.015
41	37	1.850±.015	.038±.003	78.84	85.60	24	.024	7/32	25.4	1.800±.015
42	40	2.000±.015	.038±.003	85.64	93.05	24	.024	7/32	25.4	1.950±.015
43	50	2.500±.015	.038±.003	107.24	116.57	24	.024	7/32	25.4	2.450±.015
44	60	3.000±.020	.038±.003	128.84	140.05	24	.024	7/32	25.4	2.950±.015
45	64	3.200±.020	.038±.003	136.37	148.06	24	.024	7/32	25.4	3.150±.015

Notes:

1/ Nominal values for information only.
2/ DC resistance at 20 °C, ohms/1,000 feet.

Dimensions and configuration: See figure 1 and table I.

Insulation material: Polyvinylidene fluoride (PVDF); Polyalkene, crosslinked; Ethylene tetrafluoroethylene (ETFE); Ethylene tetrafluoroethylene modified crosslinked; Ethylene-chlorotrifluoroethylene (ECTFE); Fluorinated ethylene propylene (FEP); Polytetrafluoroethylene (PTFE); Perfluoralkoxy (PFA).

Voltage rating: 300 volts rms at sea level.

Conductor coating: Bare.

Conductor stranding: See table I.

Weight: See table I.

Insulation flaws: 2,500 volts rms.

Dielectric withstanding voltage: 2,000 volts rms.

Conductor resistance: See table I.

Temperature rating: -40 °C to +150 °C.

Thermal shock: -55±5 °C to +150±5 °C.

Flammability: Nonburning.

Flexing endurance: -55±5 °C to +150±5 °C for 24 AWG, 100 cycles; 26 AWG, 300 cycles; and 28 AWG, 500 cycles.

Moisture resistance:
Insulation resistance 50 megohms: 1,000 feet (minimum).

Low pressure (elevated temperature): +150±5 °C (maximum conductor temperature).

Shrinkage: 0.125 inch maximum either end.

Markings (optional): In accordance with MIL-DTL-49055.

Strippability: Not applicable.

Solderability: Not applicable.

Tear groove propagation: Not applicable.

Color: Optional.

Part or Identifying Number (PIN): The term Part or Identifying Number (PIN) is equivalent to the term part number which was previously used in this specification. The PIN consists of the letter M, the basic number of the specification sheet, and a dash number from table I. Example PIN construction for a 34 conductor, 28 AWG, 1.700 inch wide cable:

M49055/11-10

Specification sheet no.

Dash no. from table I

CONCLUDING MATERIAL

Custodians:
Army - CR
Navy - AS
Air Force - 11
DLA - CC

Review activities:
Army - AR, AT, AV, CR4, MI
Navy - EC, MC, OS, SH
Air Force - 99

Preparing activity:
DLA - CC

(Project 6145-2249-02)