MILITARY SPECIFICATION SHEET
CONNECTOR, PLUG, ELECTRICAL

This specification is approved for use by all Departments and Agencies of the Department of Defense.

The complete requirements for acquiring the connector described herein shall consist of this specification sheet and the latest issue of MIL-C-55181.

CONNECTOR ASSEMBLY

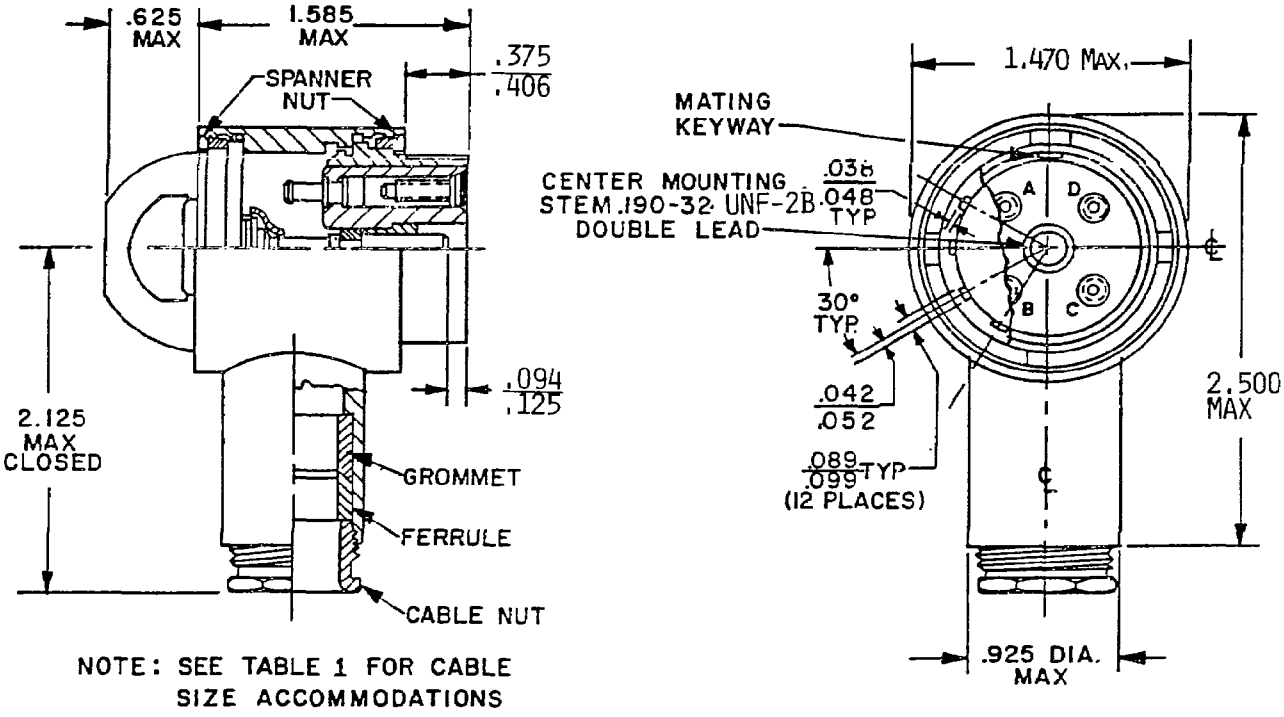

NOTE: SEE TABLE 1 FOR CABLE SIZE ACCOMMODATIONS

AMSC N/A

FSC 5935

DISTRIBUTION STATEMENT A. APPROVED FOR PUBLIC RELEASE; DISTRIBUTION IS UNLIMITED.

NOSE PIECE ASSEMBLY

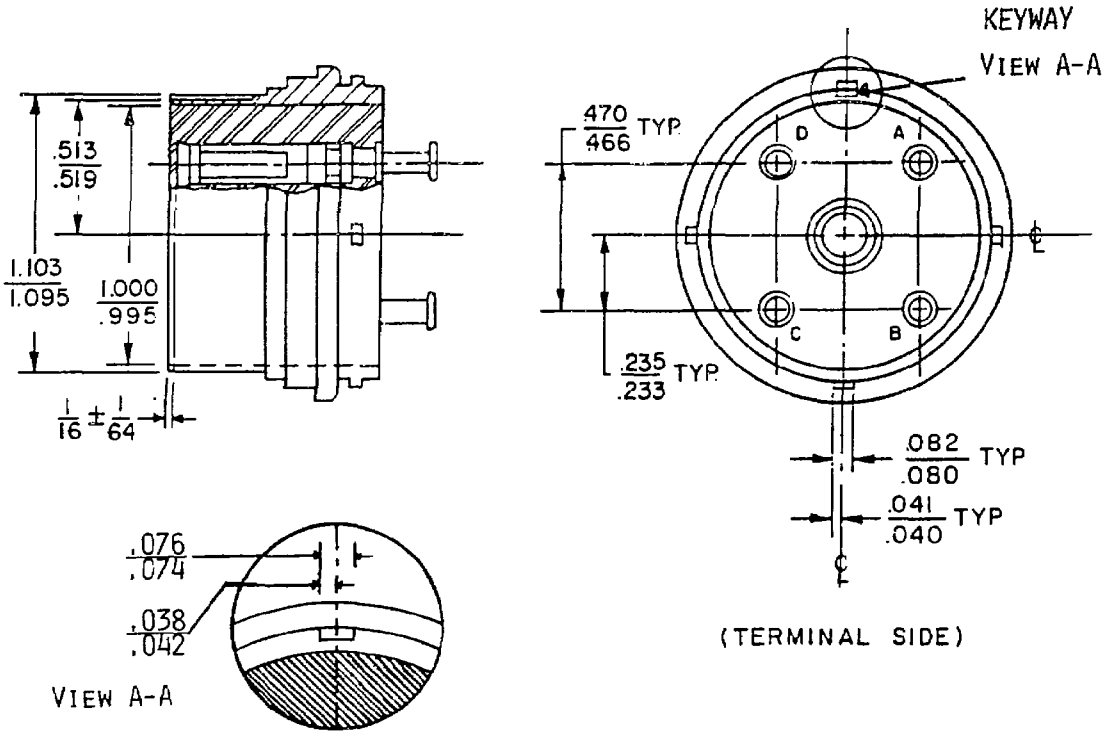

CONTACT

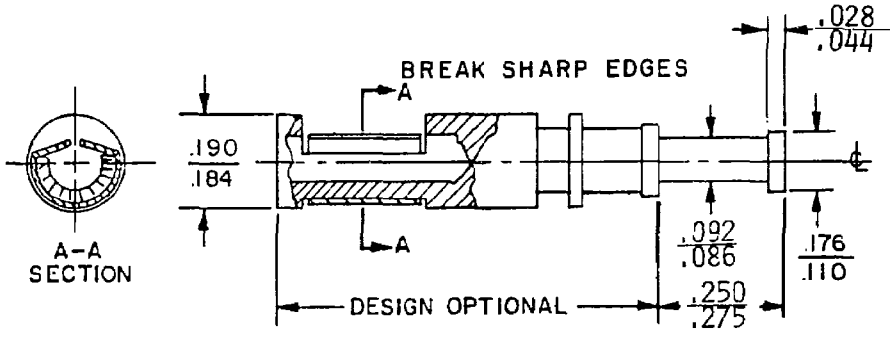

NOTES:

1. DIMENSIONS ARE IN INCHES.
2. DIMENSIONAL TOLERANCE SHALL BE ± .005 UNLESS OTHERWISE SPECIFIED.
3. ANGULAR TOLERANCE SHALL BE ± 30 MIN. UNLESS OTHERWISE SPECIFIED.

REQUIREMENTS:

Dimensions and configuration:

Gages: See drawing SC-GL-323024.

Mating connector: M55181/2-01.

Contact current rating: 35 amperes.

Part number: M55181/1-(dash number from table I).

TABLE I. Dash number, cross reference, and intermating table.

New mil P/N	1/ Type designator	Cable size accomodation Min	Max	Mates with New mil P/N	1/ Type designator
M55181/1-01	MW10F(M)A11	.292	.343	M55181/2-01	MW20M(M)A00
M55181/1-02	MW10F(M)A13	.323	.406	M55181/2-01	MW20M(M)A00
M55181/1-03	MW10F(M)A17	.448	.531	M55181/2-01	MW20M(M)A00
M55181/1-04	MW10F(M)A19	.511	.593	M55181/2-01	MW20M(M)A00
M55181/1-05	MW10F(M)A15	.386	.468	M55181/2-01	MW20M(M)A00

1/ this type designator shall not be referenced for procurement purposes.

Custodians:
Army - CR
Navy - EC
Air Force - 85

Review activities:
Army -
Navy -
Air Force - 11, 99
DLA - ES

Preparing activity:
Army - CR

(PROJECT 5995-3569-01)