MILITARY SPECIFICATION SHEET
CONNECTOR, RECEPTACLE, ELECTRICAL

This specification is approved for use by all Departments and Agencies of the Department of Defense.

The complete requirements for acquiring the connector described herein shall consist of this specification sheet and the latest issue of MIL-C-55181.

CONNECTOR ASSEMBLY

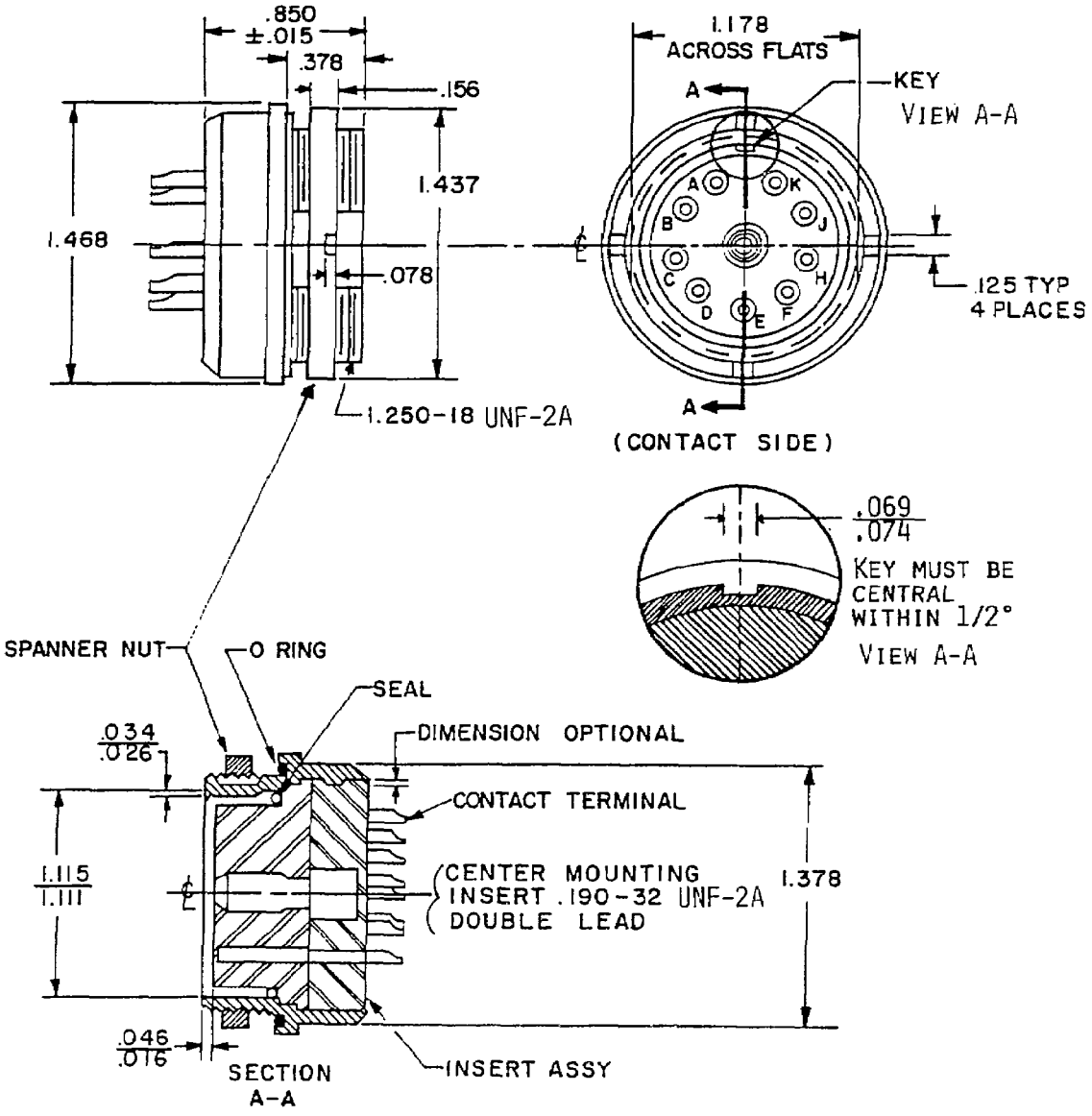

AMSC N/A

FSC-5935

DISTRIBUTION STATEMENT A. APPROVED FOR PUBLIC RELEASE; DISTRIBUTION IS UNLIMITED.

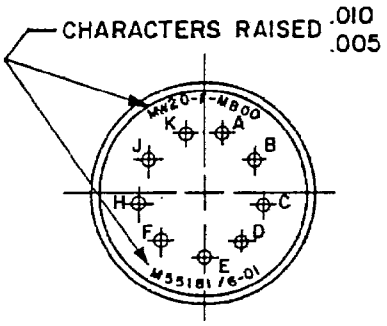

(TERMINAL SIDE)

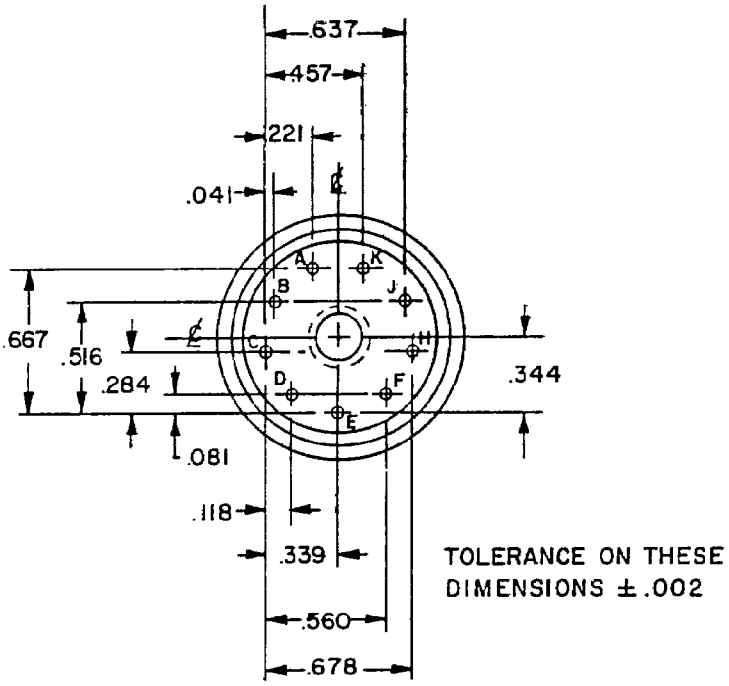

(CONTACT SIDE)

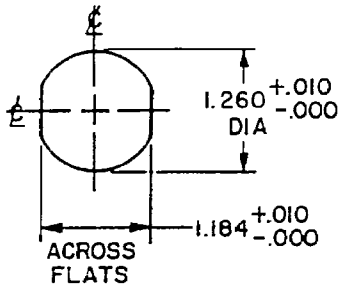

RECOMMENDED PANEL CUTOUT

CONTACT

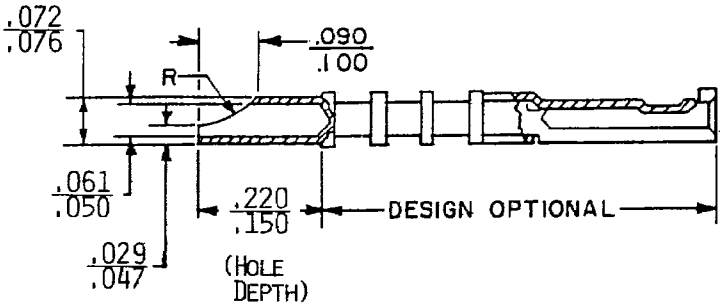

NOTES:

1. DIMENSIONS ARE IN INCHES.
2. DIMENSIONAL TOLERANCE SHALL BE ± .005 UNLESS OTHERWISE SPECIFIED.

REQUIREMENTS:

Dimensions and configuration:

Gages: See drawing SC-GL-323139.

Mating connector: M55181/5-01, -02, -03, and -04.

Contact current rating: 7.5 amperes.

Part number: M55181/6-01.

Custodians:

Army - CR

Navy - EC

Air Force - 85

Review activities:

Army -

Navy -

Air Force - 11, 99

DLA - ES

Preparing activity:

Army - CR

(PROJECT 5935-3569-06)