MILITARY SPECIFICATION SHEET

CONNECTORS, PRINTED CIRCUIT SUBASSEMBLY AND ACCESSORIES: PLUG, RIGHT ANGLE, 90 THROUGH 240 CONTACT POSITIONS, FOR PRINTED WIRING BOARDS (.100 INCH SPACING)

This specification sheet is approved for use by the Space and Naval Warfare Systems Command, Department of the Navy, and is available for use by all Departments and Agencies of the Department of Defense.

The requirements for acquiring the product described herein shall consist of this specification sheet and the issue of the following specification listed in that issue of the Department of Defense Index of Specifications and Standards (DODISS) specified in the solicitation: MIL-C-55302.

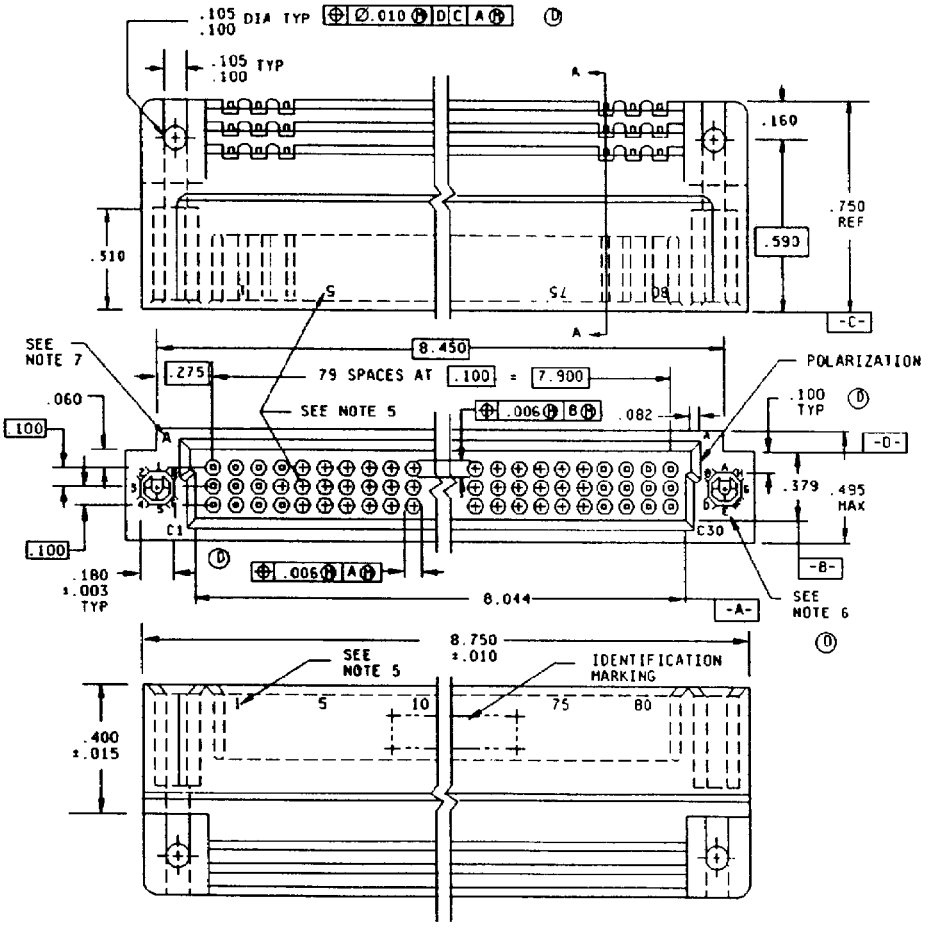

(D) FIGURE 1. Connectors, kit plug, .100 (2.54 mm) spacing, 160 and 240 contacts.

(D) denotes changes.

DISTRIBUTION STATEMENT A. Approved for public release; distribution is unlimited.

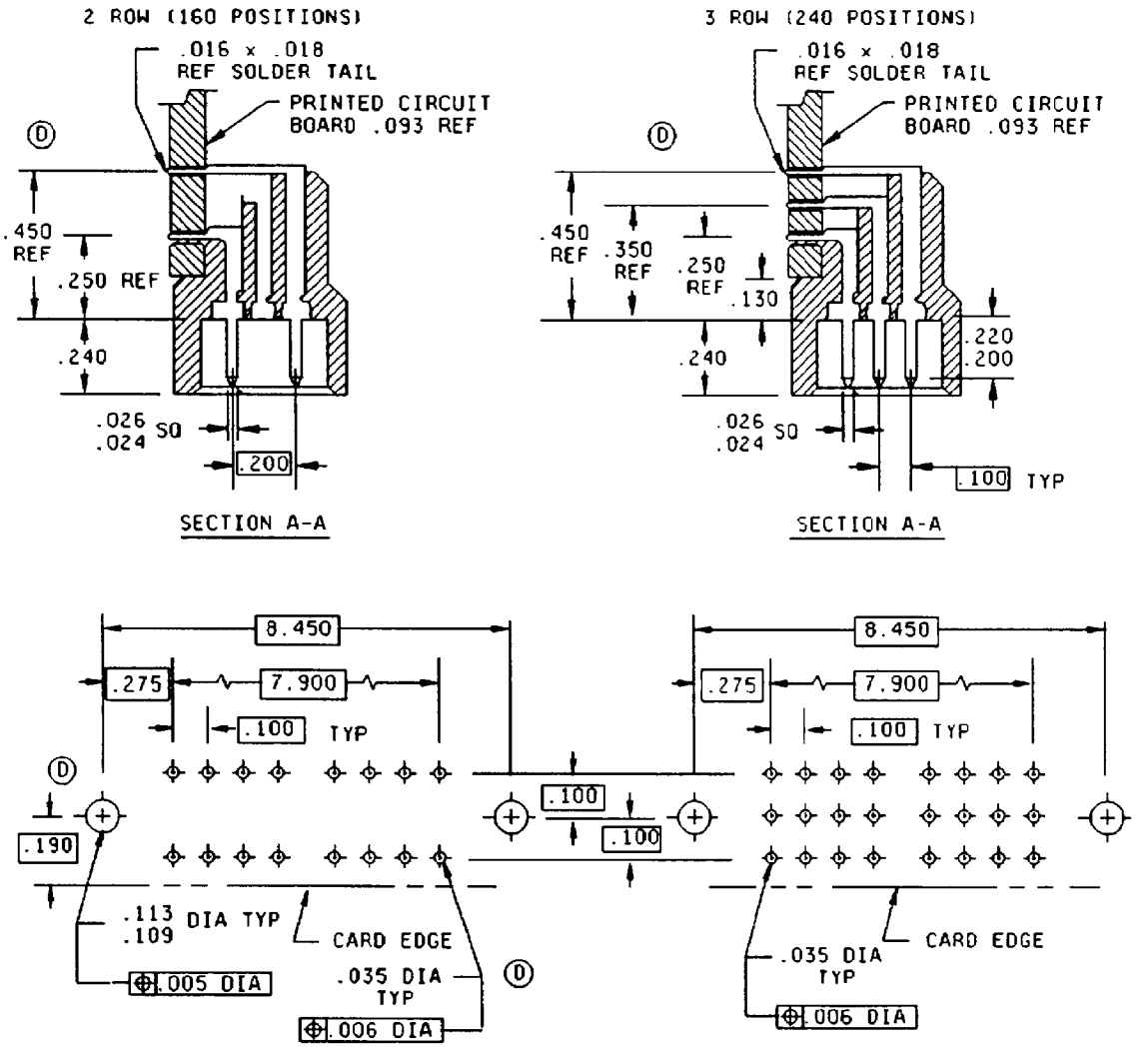

Recommended circuit layouts

(D) FIGURE 1. Connectors, kit plug, .100 (2.54 mm) spacing, 160 and 240 contacts - Continued.

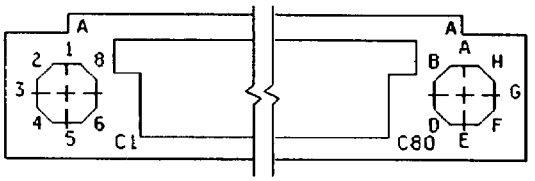

TYPE I

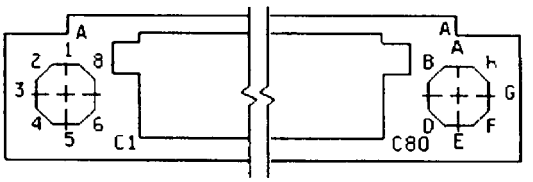

TYPE II

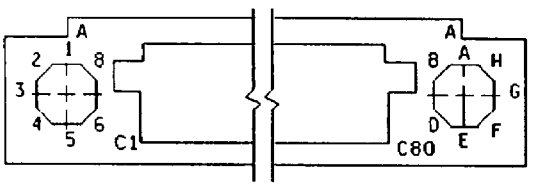

TYPE III

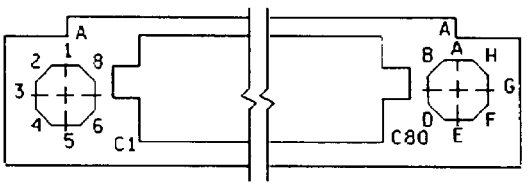

TYPE IV

POLARIZATION

NOTES:

1. Dimensions are in inches.
2. Metric equivalents are given for general information only.
3. Unless otherwise specified, tolerance is ±.005 (0.13 mm) on decimals and +2° on angles.
4. These connectors mate with connectors specified in MIL-C-55302/130.
5. (D) Numbers indicating end cavities marked or molded both sides. Lines indicating every five cavities marked or molded on mating face, except end cavities.
6. Location indicators embossed on surface.
7. (D) Letters indicating rows and numbers indicating end cavities marked or molded this surface.

Inches	mm	Inches	mm	Inches	mm
.003	0.08	.109	2.76	.310	7.87
.005	0.13	.113	2.87	.377	9.58
.006	0.15	.130	3.30	.400	10.16
.010	0.25	.160	4.06	.495	12.57
.024	0.61	.180	4.57	.590	14.99
.026	0.66	.200	5.08	.750	19.05
.035	0.89	.220	5.59	7.900	200.66
.060	1.52	.240	6.10	8.044	204.32
.082	2.08	.250	6.35	8.450	214.63
.100	2.54	.275	6.99	8.750	222.25
.105	2.67				

(D) FIGURE 1. Connectors, kit plug, .100 (2.54 mm) spacing, 160 and 240 contacts - Continued.

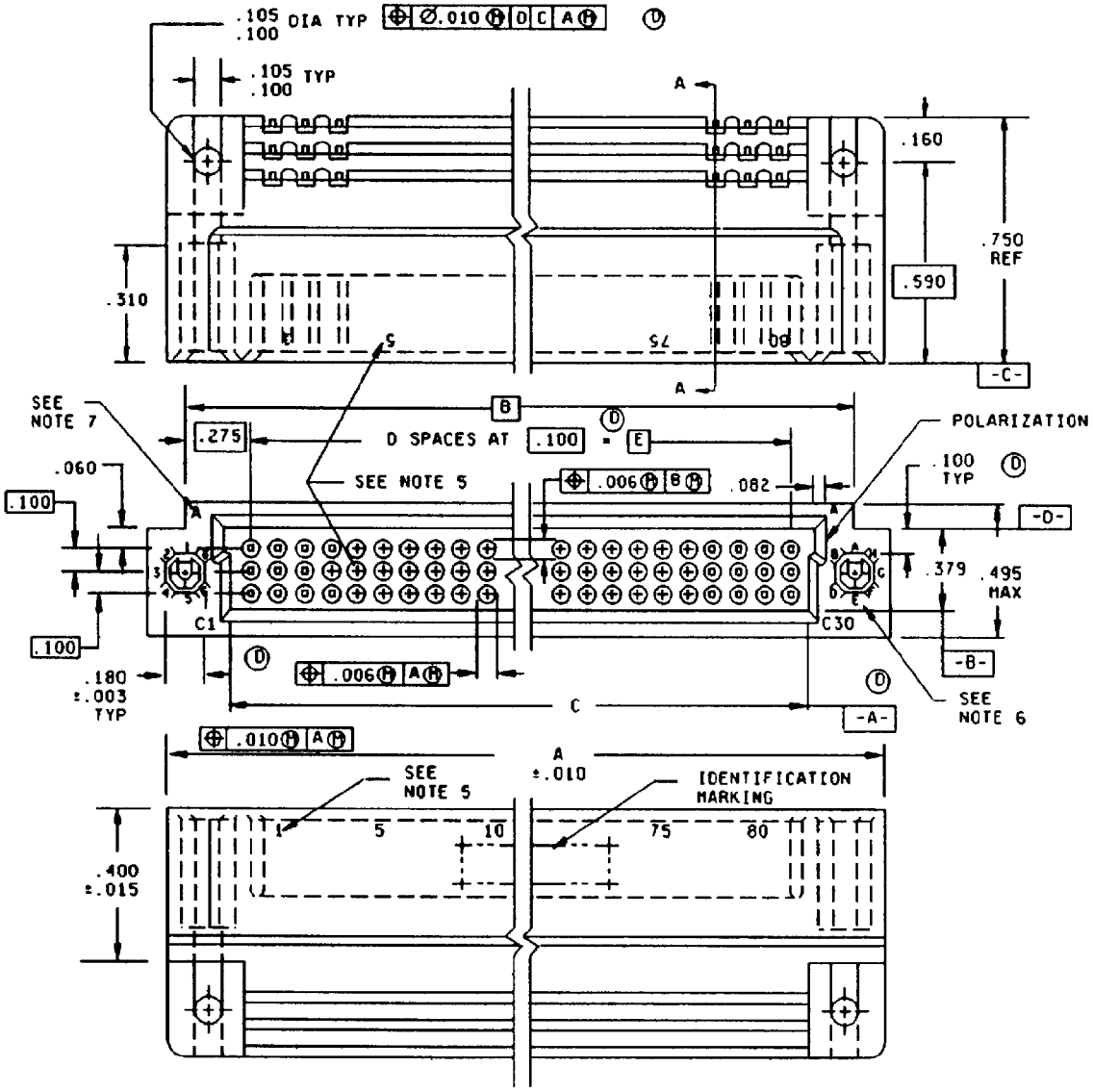

(D) FIGURE 2. Connectors, plug, .100 (2.54 mm) spacing, 90 thru 240 contact positions.

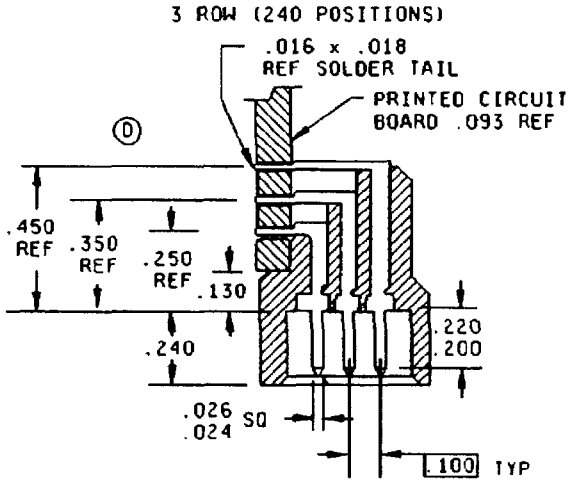

SECTION A-A

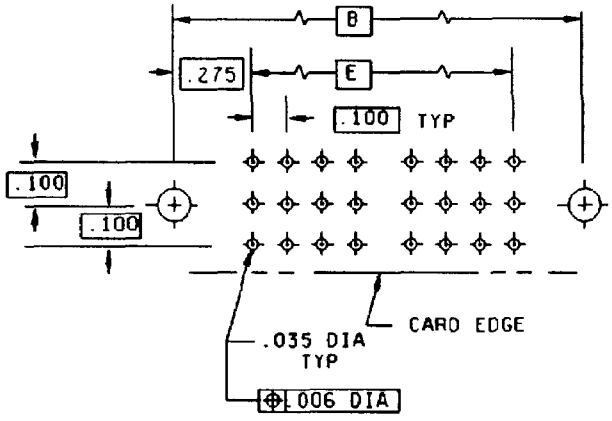

Recommended circuit layout

Inches	mm
.003	0.08
.005	0.13
.006	0.15
.010	0.25
.024	0.64
.026	0.66
.035	0.89
.060	1.52
.082	2.08
.100	2.54
.105	2.67
.109	2.76
.113	2.87
.130	3.30
.160	4.06
.180	4.57
.200	5.08
.220	5.59
.240	6.10
.250	6.35
.275	6.99
.310	7.87
.377	9.58
.400	10.16
.495	12.57
.590	14.99
.750	19.05
7.900	200.66
8.044	204.32
8.450	214.63
8.750	222.25

NOTES:
1. Dimensions are in inches.
2. Metric equivalents are given for general information only.
3. Unless otherwise specified, tolerance is ±.005 (0.13 mm) on decimals and +2° on angles.
4. These connectors mate with connectors specified in MIL-C-55302/130.
5. (D) Numbers indicating end cavities marked or molded both sides. Lines indicating every five cavities marked or molded on mating face, except end cavities.
6. Location indicators embossed on surface.
7. (D) Letters indicating rows and numbers indicating end cavities marked or molded this surface.

(D) FIGURE 2. Connectors, plug, .100 (2.54 mm) spacing, 90 thru 240 contact positions.

TABLE I. Dash numbers, polarization types, and contact types for 160 and 240 contact positions.

Dash number	Number contacts	Type polarization
01	160	I
02	160	II
03	160	III
04	160	IV
05	240	I
06	240	II
07	240	III
08	240	IV

D TABLE II. Dash numbers and dimensions (For 90 through 240 contact positions).

Dash no.	No. of contacts	A	B	C	D	E	Contact ident. no.
09	90	3.750 (95.25)	3.450 (87.63)	3.044 (77.32)	29	2.900 (73.66)	1-30
10	105	4.250 (107.95)	3.950 (100.33)	3.544 (90.02)	34	3.400 (86.36)	1-35
11	120	4.750 (120.65)	4.450 (113.03)	4.044 (102.72)	39	3.900 (99.06)	1-40
12	135	5.250 (133.35)	4.950 (125.73)	4.544 (115.42)	44	4.400 (111.76)	1-45
13	150	5.750 (146.05)	5.450 (138.43)	5.044 (128.12)	49	4.900 (124.46)	1-50
14	165	6.250 (158.75)	5.950 (151.13)	5.544 (140.82)	54	5.400 (137.16)	1-55
15	180	6.750 (171.45)	6.450 (163.83)	6.044 (153.52)	59	5.900 (149.86)	1-60
16	195	7.250 (184.15)	6.950 (176.53)	6.544 (166.22)	64	6.400 (162.56)	1-65
17	210	7.750 (196.85)	7.450 (189.23)	7.044 (178.92)	69	6.900 (175.26)	1-70
18	240	8.750 (222.25)	8.450 (214.63)	8.044 (204.32)	79	7.900 (200.66)	1-80

Design and construction:

Dimensions and configurations: See figures 1 and 2, and table II.

Material:

D Body: In accordance with MIL-C-55302 or MIL-C-24519 type GLCP-30F.

D Contact material: In accordance with MIL-C-55302 or beryllium copper alloy CDA174 in accordance with ASTM B768.

Plating:

Contact engagement area (.150 inch minimum length): Gold over nickel per MIL-C-55302.

Solder tail area (.160 inch minimum length): Tin lead plate over nickel per MIL-C-55302.

Contact identification: See figures 1 and 2.

Current rating: 3.0 amperes, maximum per contact; 2.25 amperes continuous per contact at 75°F.

Keying: See MIL-C-55302/31. Two keys and two key retaining rivets packaged with connectors for -01 through -08 only. For -09 through -18, keys and rivets shall be ordered separately.

Mating and unmating: The maximum mating force in pounds shall be the number of contacts multiplied by 0.25; the withdrawal force in pounds shall be a minimum of 0.025 times the number of contacts and shall not exceed the measured insertion force.

Contact resistance: No individual contact pair shall have a resistance exceeding 0.020 ohm.

Contact retention: 3 pounds, minimum.

Dielectric withstanding voltage:

Sea level: 900 volts rms.
High altitude: 200 volts rms.

Part number: M55302/129- (and dash number from table I for 160 and 240 contact positions). M55302/129- (and dash numbers from table II for 90 through 240 contact positions).

A customer-supplied teflon cover is recommended to prevent heat damage to the connector during soldering operations.

Patent number 3,404,367. The Government has a royalty free license under this patent for the benefit of manufacturers of the item either for the Government or for use in equipment to be delivered to the Government.

CONCLUDING MATERIAL

Custodian:
Navy - EC

Preparing activity:
Navy - EC

Agent:
DLA - ES

(Project 5935-N488-01)