INCH-POUND
MIL-C-55302/142B
17 November 1988
SUPERSEDING
MIL-C-55302/142A
18 December 1984

MILITARY SPECIFICATION SHEET

CONNECTORS, PRINTED CIRCUIT SUBASSEMBLY AND ACCESSORIES: RECEPTACLE WITH SOCKET CONTACTS, FOR PRINTED WIRING BOARDS (.100 INCH SPACING)

This specification is approved for use by all Departments and Agencies of the Department of Defense.

The requirements for acquiring the connectors described herein shall consist of this specification and the latest issue of MIL-C-55302.

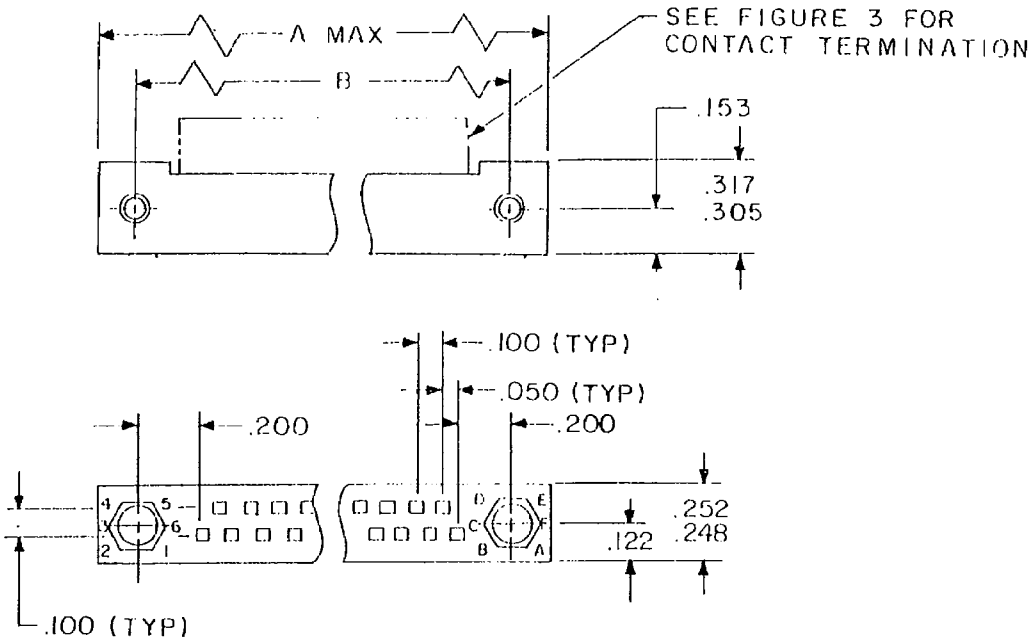

Inches	mm	Inches	mm
.050	1.27	.248	6.30
.100	2.54	.252	6.40
.122	3.10	.305	7.45
.153	3.89	.317	8.05
.200	5.08		

NOTES:
1. Dimensions are in inches.
2. Metric equivalents are given for general information only.
3. Unless otherwise specified, tolerance is ±.005 (0.13 mm).

FIGURE 1. Connector, receptacle (.100 inch spacing).

AMSC N/A FSC 5935

DISTRIBUTION STATEMENT A. Approved for public release; distribution is unlimited.

TABLE I. Arrangements and characteristics.

Contact arrangement	No of contacts	Dimensions (inches) A Max	B ±.006
M55302/142A	17	1.516 (38.50)	1.200 (30.48)
M55302/142B	29	2.114 (58.70)	1.80 (45.7)
M55302/142C	33	2.314 (58.80)	2.000 (50.80)
M55302/142D	41	2.716 (69.00)	2.400 (60.96)
M55302/142E	53	3.315 (84.20)	3.000 (76.20)
M55302/142F	65	3.917 (99.50)	3.60 (91.44)

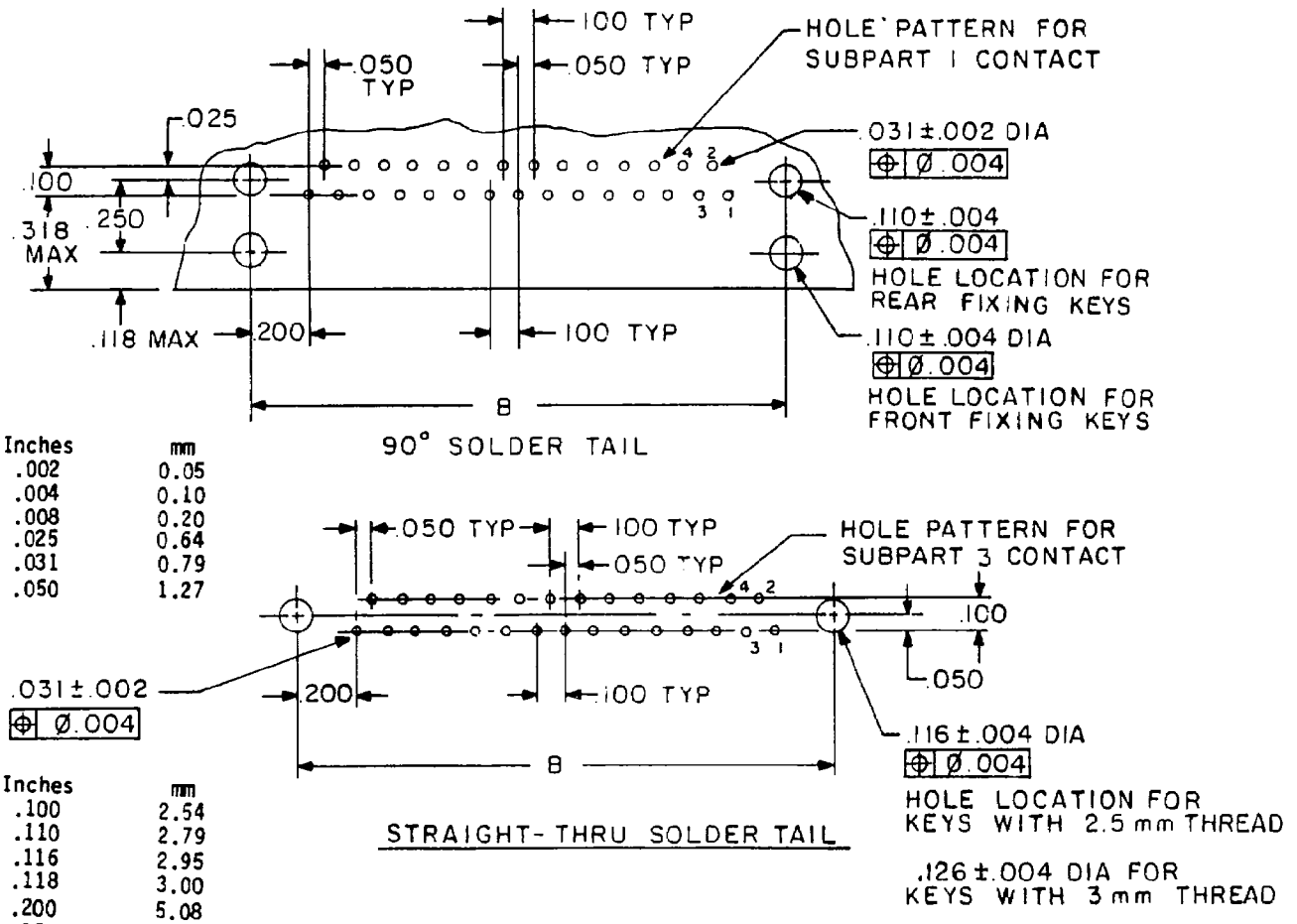

Inches	mm
.002	0.05
.004	0.10
.008	0.20
.025	0.64
.031	0.79
.050	1.27

Inches	mm
.100	2.54
.110	2.79
.116	2.95
.118	3.00
.200	5.08
.250	6.35
.318	8.08

FIGURE 2. Recommended hole patterns.

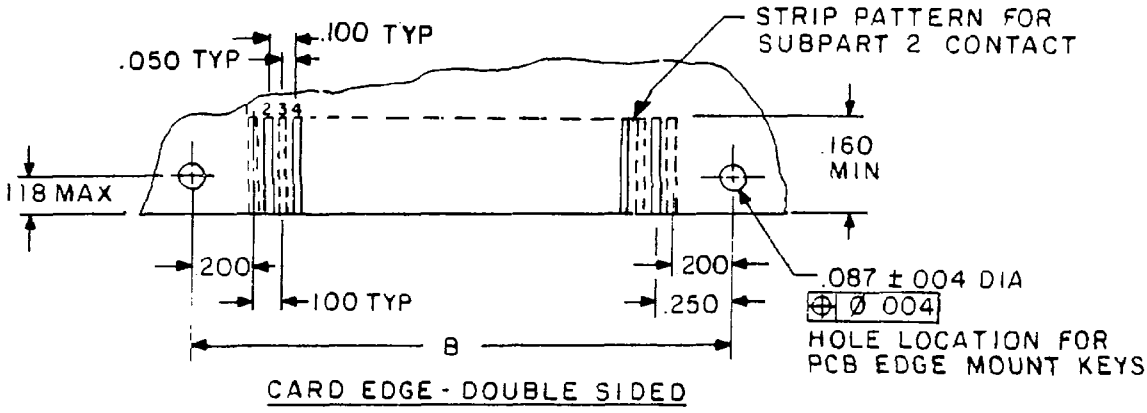

NOTES:
1. Dimensions are in inches.
2. Metric equivalents are given for general information only.
3. Unless otherwise specified, tolerance is ±.005 (0.13 mm).
4. Metric equivalents are in parentheses.

FIGURE 2. Recommended hole patterns - Continued.

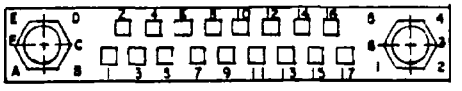

Part number
M55302/142A

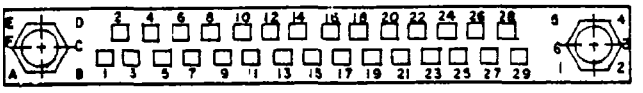

Part number
M55302/142B

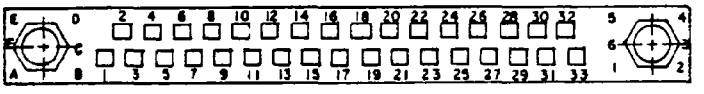

Part number
M55302/142C

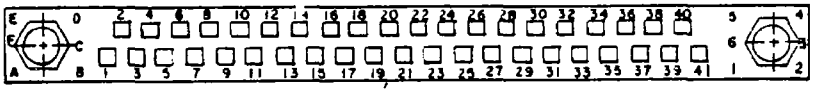

Part number
M55302/142D

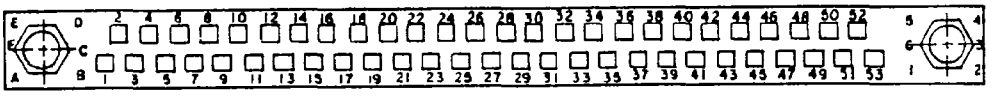

Part number
M55302/142E

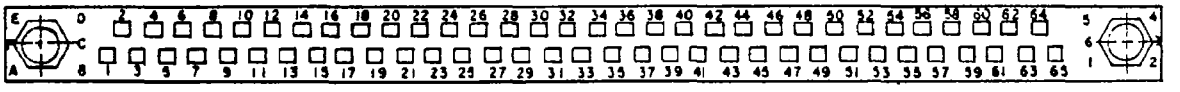

Part number
M55302/142F

FIGURE 3. Contact arrangements and keying configurations.

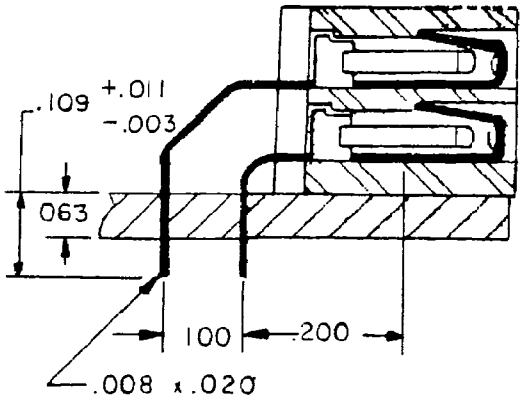

Subpart 1
90° Solder tails

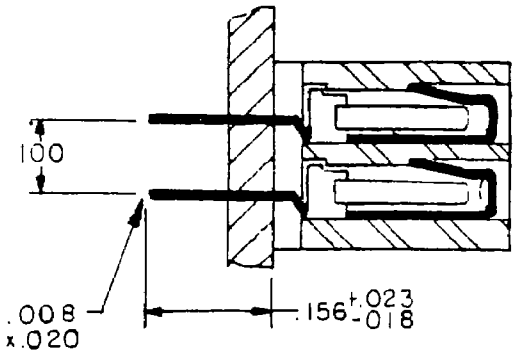

Subpart 3
Solder tails

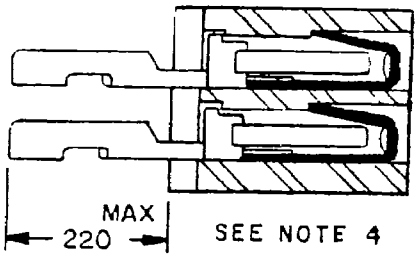

Subpart 4
Solder terminals

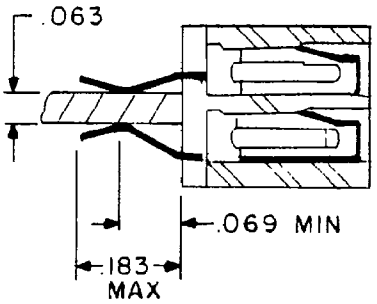

Subpart 2
Card edge

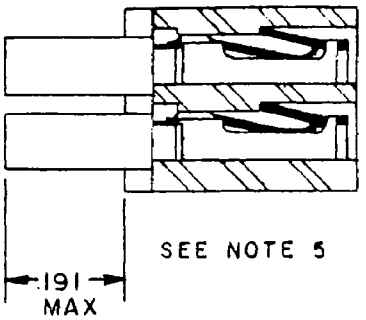

Subpart 5
Crimp 24-28 AWG

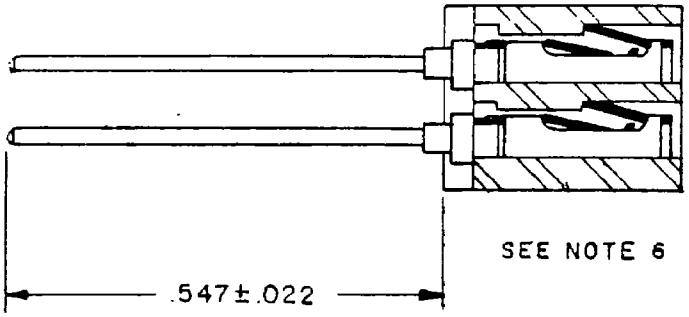

Subpart 6
Wire wrappost

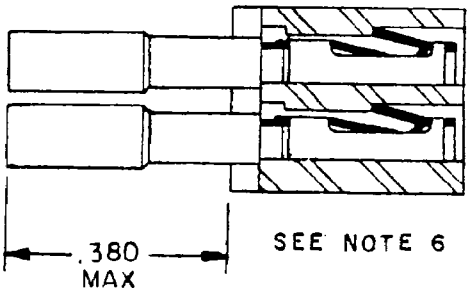

Subpart 7 SEE NOTE 4
Crimp 22 AWG

NOTES:
1. Dimensions are in inches.
2. Metric equivalents are given for general information only.
3. Unless otherwise specified, tolerance is ±.005 (0.13 mm).
4. Contact accepts no. 22 AWG wire.
5. Contact, crimp type, accepts no 22-26 AWG wires.
6. Contact with .025 (0.64 mm) wrappost in accordance with MIL-STD-1130.

Inches	mm	Inches	mm
.003	0.08	.100	2.54
.008	0.20	.109	2.77
.011	0.28	.156	3.96
.018	0.46	.183	4.65
.020	0.51	.191	4.85
.022	0.56	.200	5.08
.023	0.58	.220	5.59
.063	1.60	.380	9.65
.069	1.75	.547	13.89

FIGURE 4. Connector terminations.

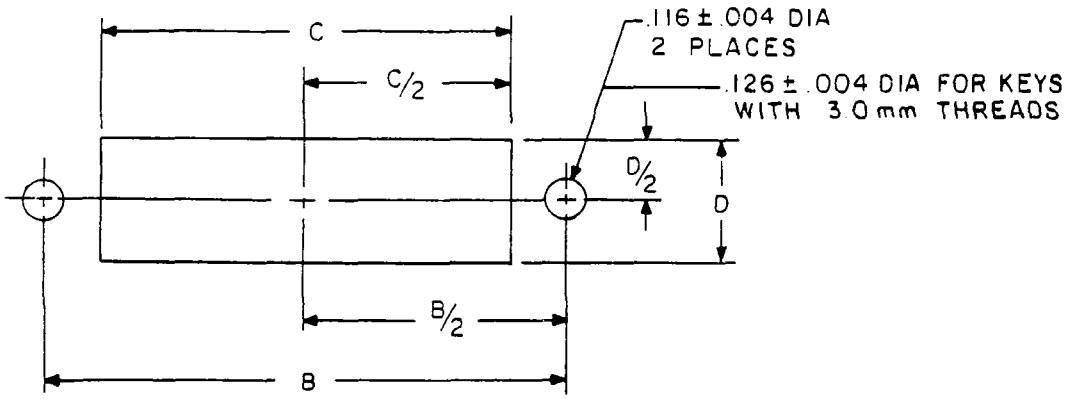

FIXED MOUNT

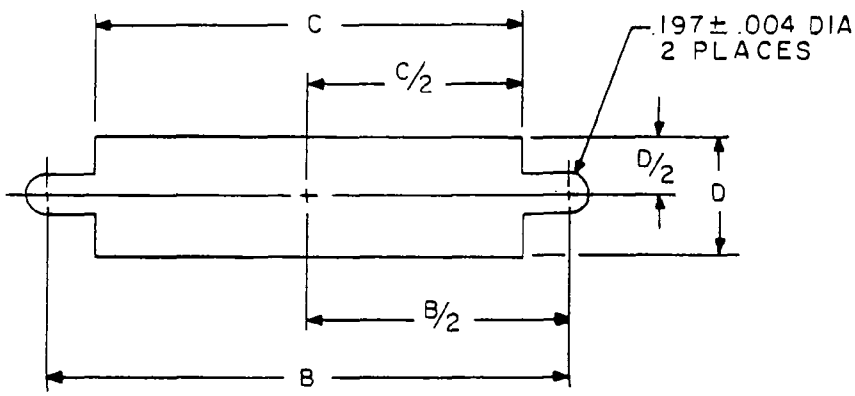

FLOATING MOUNT

Number of Contacts	17	29	33	41	53	65
B ±.008 (±0.20)	1.200 (30.48)	1.800 (45.72)	2.000 (50.80)	2.400 (60.96)	3.000 (76.20)	3.600 (91.44)
C Min.	1.020 (25.91)	1.618 (41.10)	1.819 (46.20)	2.221 (56.41)	2.819 (71.60)	3.422 (86.92)
D Min.	.374 (9.45)	.374 (9.45)	.374 (9.45)	.374 (9.45)	.374 (9.45)	.374 (9.45)

NOTES:
1. Dimensions are in inches.
2. Metric equivalents are given for general information only.
3. Unless otherwise specified, tolerance is ±.005 (0.13 mm).
4. Floating mount panel thickness .085 (2.15 mm) maximum.

FIGURE 5. Recommended panel cutouts.

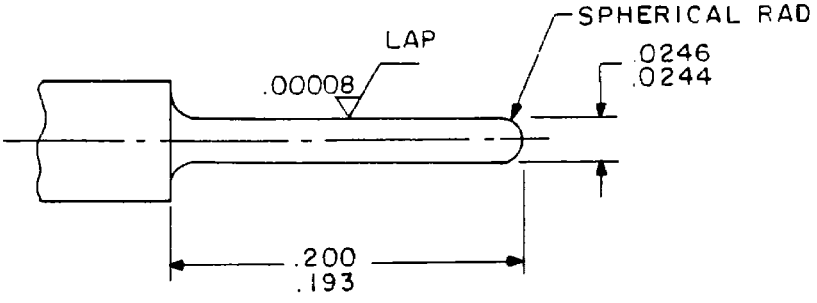

TEST PIN A

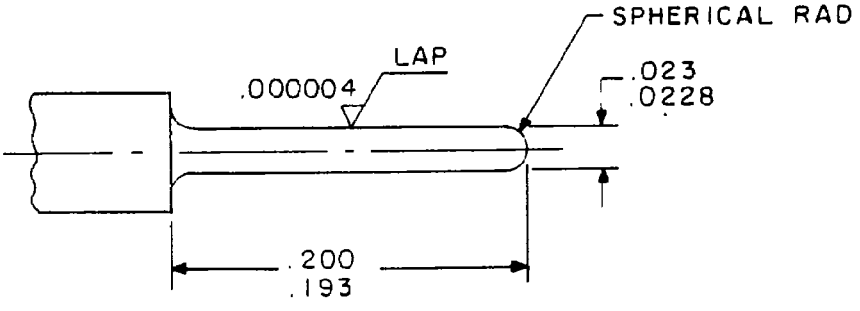

TEST PIN B

Material: Tool steel

FIGURE 6. Test pins.

REQUIREMENTS:

Dimensions and configuration: See figures 1 through 5 and table I.

Contact identification: See figure 3.

Contact retention: 4 pounds minimum for each contact.

Contact engagement: 0.7 ounce minimum, 3.6 ounces maximum.

Contact separation: 0.5 ounce minimum. Use the following test procedure:

a. Insert and withdraw test pin "A" (see figure 6)

b. Insert test pin "B" (see figure 6) fully, then withdraw the pin and measure the separation force

Contact resistance: Shall not exceed 12 milliohms.

Dielectric withstanding voltage:

Sea level: 1,000 V rms, 60 Hz.

High altitude: 300 V rms, 60 Hz.

Current rating, maximum: 3.0 amperes.

Keying socket: Two hexagonal keyed guides provide 36 polarizing positions. Keys are constructed in accordance with M55302/154. Connectors are supplied with keying pins in the "1" and "A" positions, except for 1/4-turn locking styles, which are keyed in "F" and "6" positions. When required, connectors can be easily keyed to the desired position by using a standard wrench or screwdriver.

Crimping tools (for subparts 4 and 6):

Basic tool: M22520/2-01.

Positioner: M22520/2-36.

Removal tool: See M81969/40-01.

Hood types: See MIL-C-55302/155.

Mounting hardware: See MIL-C-55302/154.

Mating connectors: Shall conform to MIL-C-55302/140.

Retention clip: Optional.

Oversize pin exclusion test: Not applicable.

Part number: Consists of the letter M, the basic number of the specification sheet, and a dash number compiled as follows:

Example:

M55302/142 * * N 1 *

Specification sheet number
Receptacle with socket contacts

Contact arrangement
(see figure 3)

Contact type - 3.0 amperes
(see figure 4)

Contact type - Coaxial
N - not applicable

Indexing type
1 - Hexagon post (36 positions)

Mounting hardware
(see MIL-C-55302/154)

NOTE: Revision letters are not used to denote changes due to the extensiveness of the changes.

CONCLUDING MATERIAL

Custodians:
Army - CR
Navy - EC
Air Force - 17

Review activities:
Army - AR, AT, AV, MI
Navy - AS, OS, SH
Air Force - 11, 85, 99
DLA - ES

User activities:
Army - ME
Navy - MC
Air Force - 19

Preparing activity:
Army - CR

Agent:
DLA - ES

(Project 5935-3652-03)