INCH-POUND
MIL-C-55302/149B
17 November 1988
SUPERSEDING
MIL-C-55302/149A
18 December 1984

MILITARY SPECIFICATION SHEET

CONNECTORS, PRINTED CIRCUIT SUBASSEMBLY AND ACCESSORIES: PLUG WITH SOCKET CONTACTS, 1.516 INCHES LENGTH, 2 KEYING PINS, FOR PRINTED WIRING BOARDS (.100 INCH SPACING)

This specification is approved for use by all Departments and Agencies of the Department of Defense.

The requirements for acquiring the connectors described herein shall consist of this specification and the latest issue of MIL-C-55302.

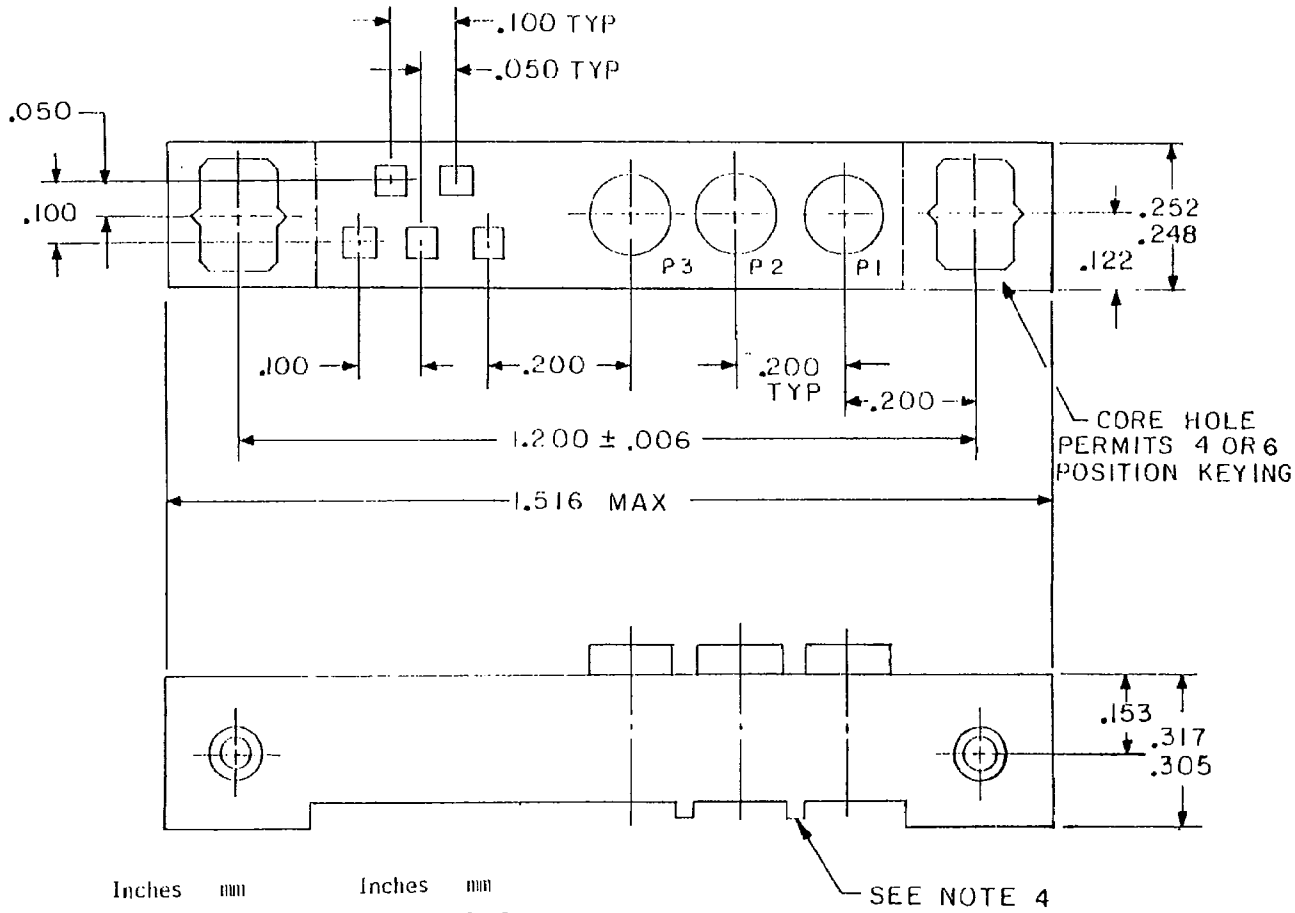

Inches	mm	Inches	mm
.006	0.15	.248	6.30
.050	1.27	.252	6.40
.100	2.54	.305	7.75
.122	3.10	.317	8.52
.153	3.89	1.200	30.48
.200	5.08	1.516	38.51

NOTES:
1. Dimensions are in inches.
2. Metric equivalents are given for general information only.
3. Unless otherwise specified all tolerances are ±.005 (0.13 mm).
4. Standoffs are located between each cable hole and between each hole and contact hole set.

FIGURE 1. Connector, plug (.100 inch spacing).

DISTRIBUTION STATEMENT A. Approved for public release; distribution is unlimited.

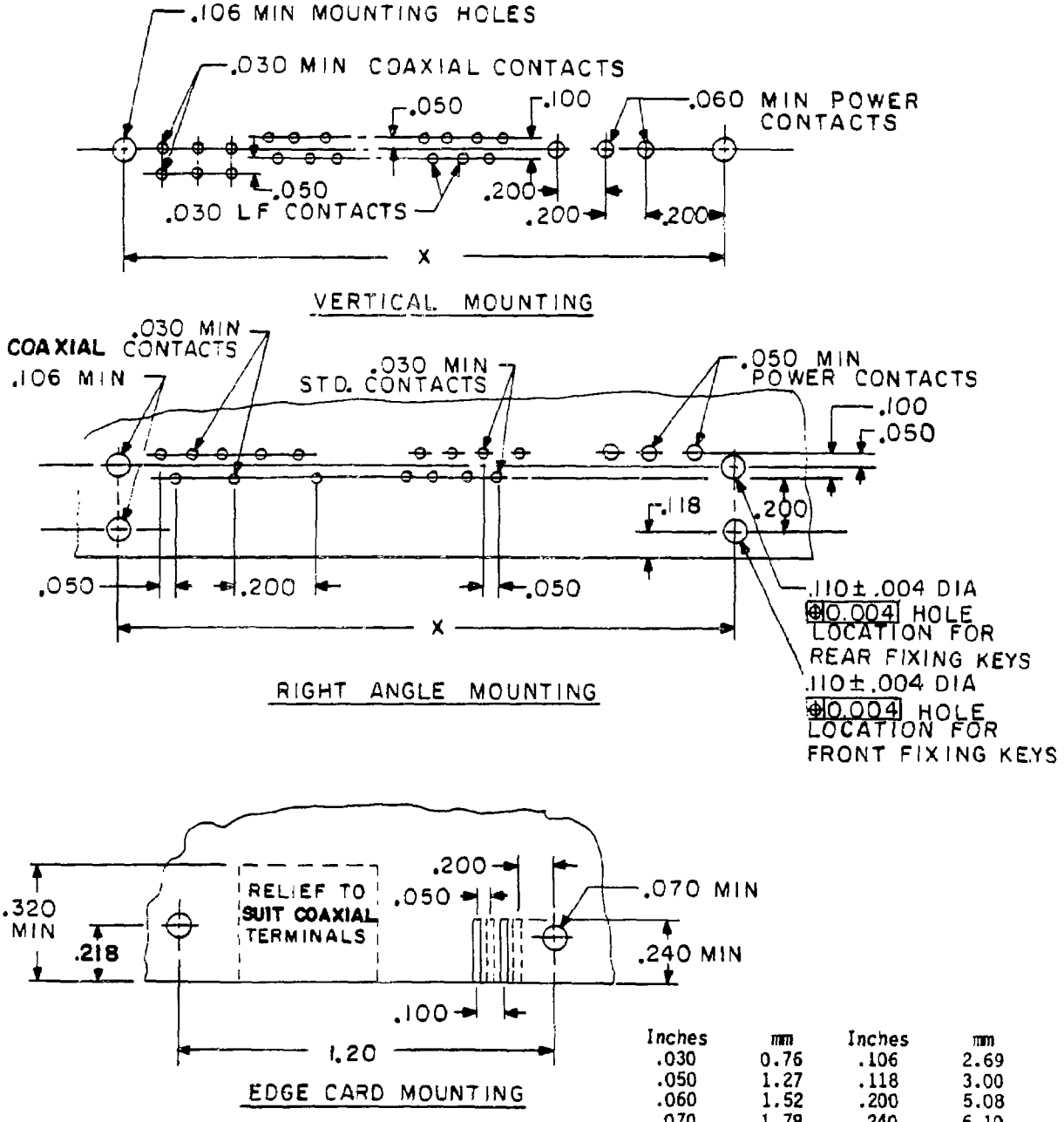

Inches	mm	Inches	mm
.030	0.76	.106	2.69
.050	1.27	.118	3.00
.060	1.52	.200	5.08
.070	1.78	.240	6.10
.100	2.54	.320	8.13
		1.20	30.5

NOTES:
1. Dimensions are in inches.
2. Metric equivalents are given for general information only.
3. Unless otherwise specified, tolerance is ±.005 (0.13 mm).

FIGURE 2. Recommended hole patterns.

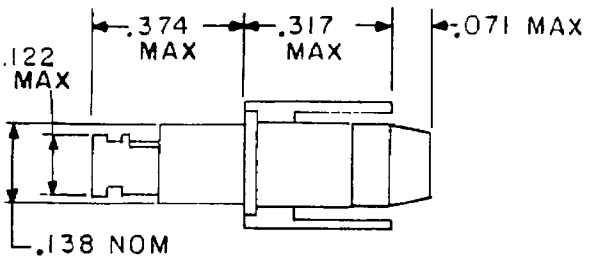

Flexible cables subpart "A"

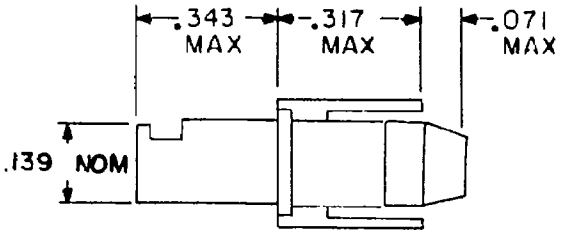

Semirigid cables subpart "B"

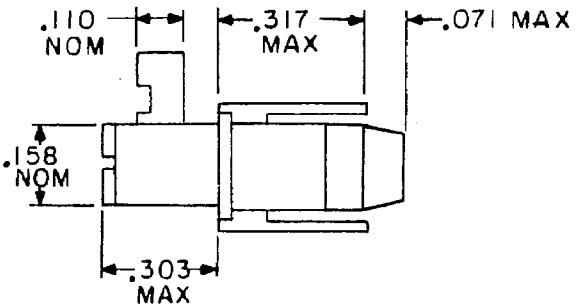

90° Flexible cables subpart "C"

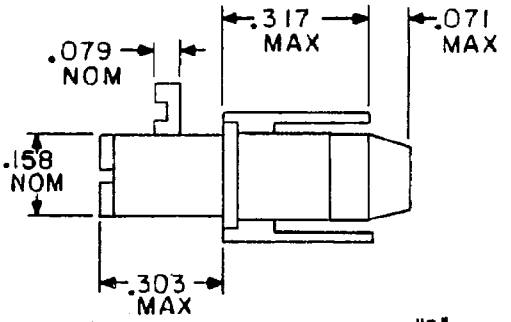

90° Semirigid cables subpart "D"

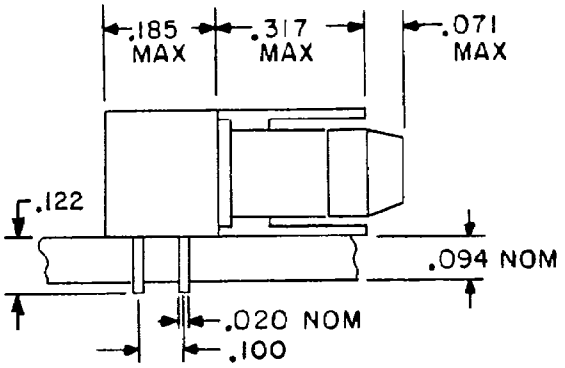

90° PCB mounting subpart "E"

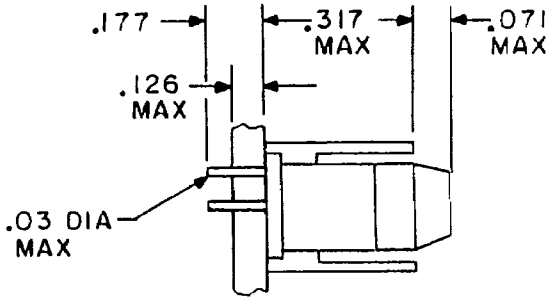

Vertical mounting PCB subpart "F"

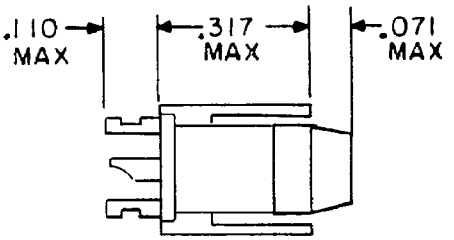

Solder posts twisted braid subpart "G"

FIGURE 3. Coaxial configurations.

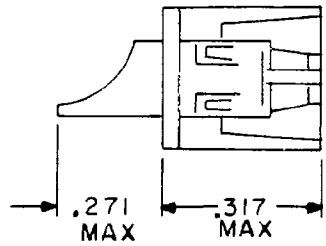

Solder bucket subpart H

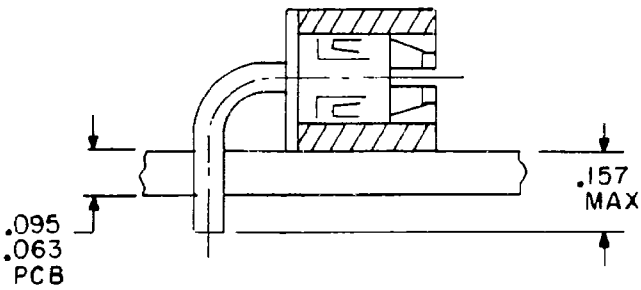

90° PCB mounting subpart J

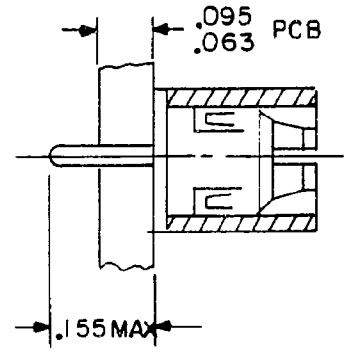

Vertical mounting PCB subpart K

Inches	mm	Inches	mm
.020	0.51	.138	3.51
.03	0.8	.139	3.53
.063	1.60	.155	3.94
.071	1.80	.157	3.99
.079	2.01	.158	4.01
.094	2.39	.177	4.50
.095	2.41	.185	4.70
.100	2.54	.271	6.88
.110	2.79	.303	7.70
.122	3.10	.317	8.05
.126	3.20	.343	8.71
		.374	9.50

NOTES:
1. Dimensions are in inches.
2. Metric equivalents are given for general information only.
3. Unless otherwise specified, tolerance is ±.005 (0.13 mm).

FIGURE 3. Coaxial configurations - Continued.

CONTACT ARRANGEMENT		KEYING
A	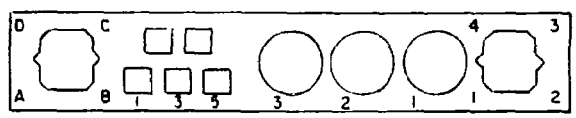	4 WAY
B	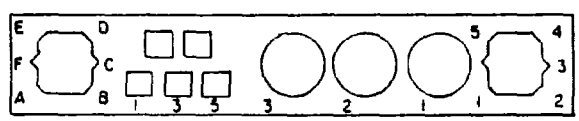	6 WAY

FIGURE 4. Contact and keying arrangements.

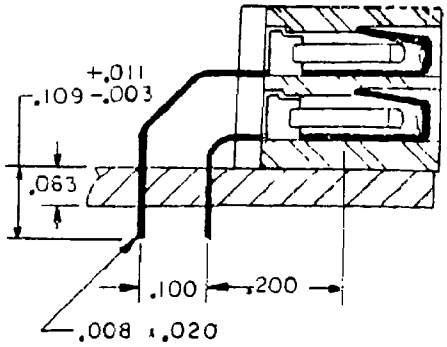

Subpart 1
90° Solder tails

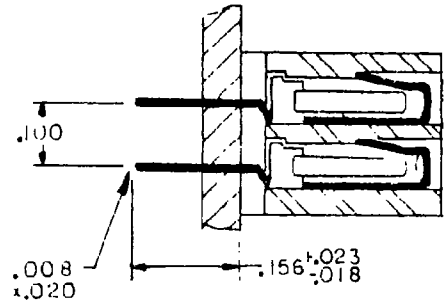

Subpart 3
Solder tails

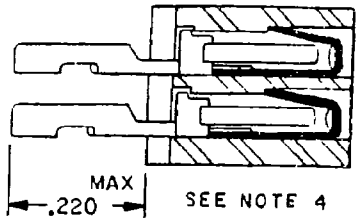

Subpart 4
Solder terminals

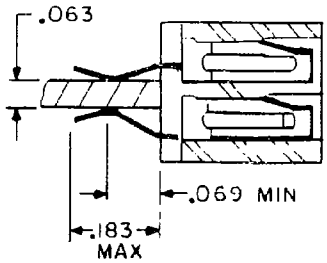

Subpart 2
Card edge

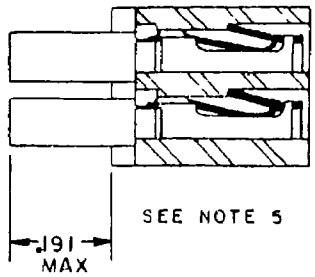

Subpart 5
Crimp 24-28 AWG

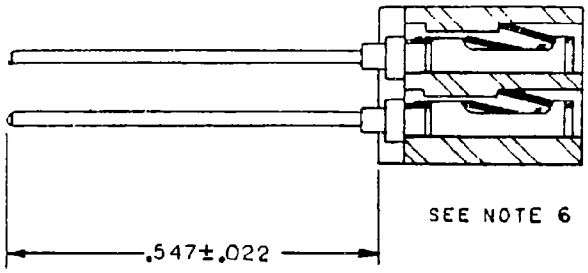

Subpart 6

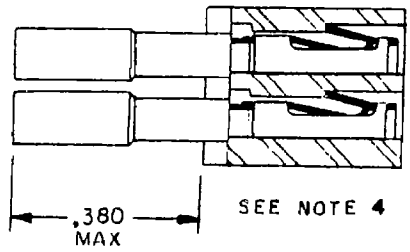

Subpart 7
Crimp 22 AWG

Inches	mm	Inches	mm
.003	0.08	.100	2.54
.008	0.20	.109	2.77
.011	0.28	.156	3.96
.018	0.46	.183	4.65
.020	0.51	.191	4.85
.022	0.56	.200	5.08
.023	0.58	.220	5.59
.063	1.60	.380	9.65
.069	1.75	.547	13.89

NOTES:
1. Dimensions are in inches.
2. Metric equivalents are given for general information only.
3. Unless otherwise specified, tolerance is ±.005 (0.13 mm).
4. Contact accepts no. 22 AWG wire.
5. Contact, crimp type, accepts no 22-26 AWG wires.
6. Contact with .025 inch (0.64 mm) wrappost in accordance with MIL-STD-1130.

FIGURE 5. Contact terminations.

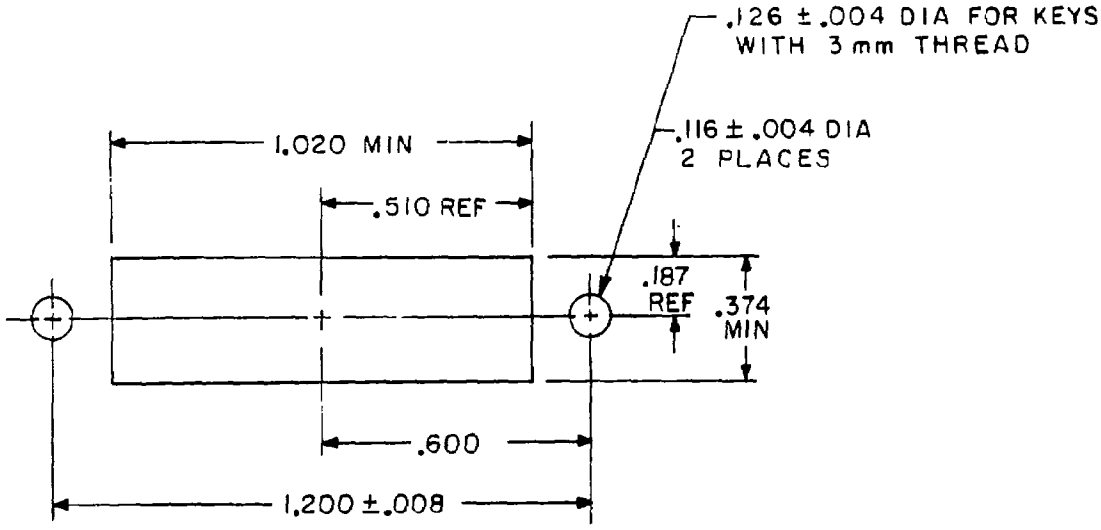

FIXED MOUNT

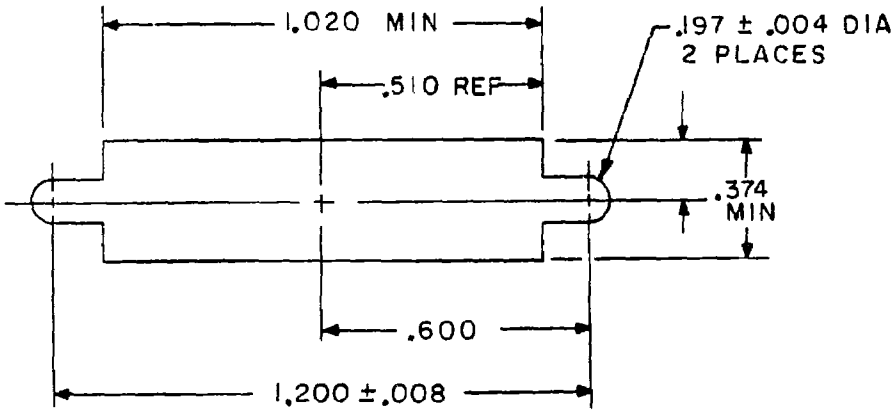

FLOATING MOUNT

Inches	mm	Inches	mm
.004	0.10	.374	9.50
.008	0.20	.510	12.95
.116	2.95	.600	15.24
.126	3.20	1.020	25.91
.187	4.75	1.200	30.48
.197	5.00		

NOTES:
1. Dimensions are in inches.
2. Metric equivalents are given for general information only.
3. Unless otherwise specified, tolerance is ±.005 (0.13 mm).
4. Floating mount panel thickness .085 (2.15 mm) maximum.

FIGURE 6. Recommended panel cutouts.

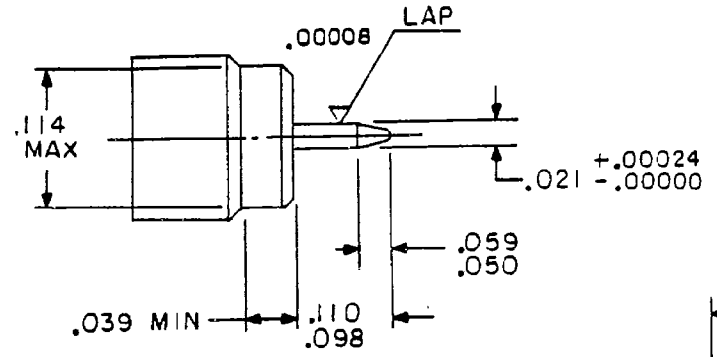

Test pin A

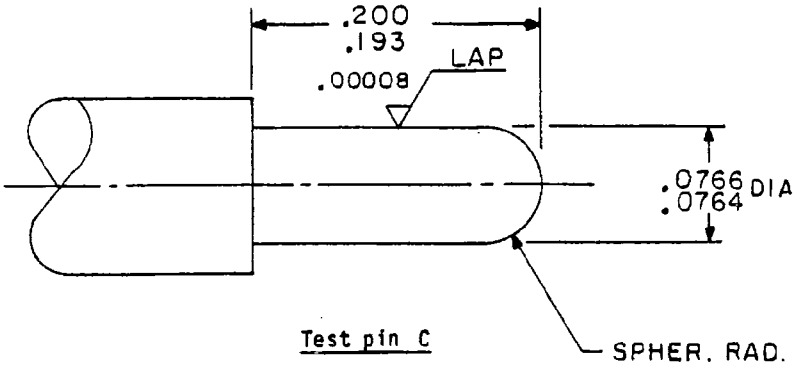

Test pin C

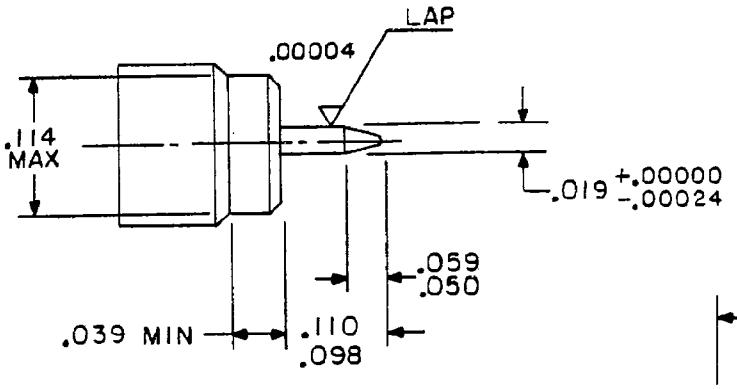

Test pin B

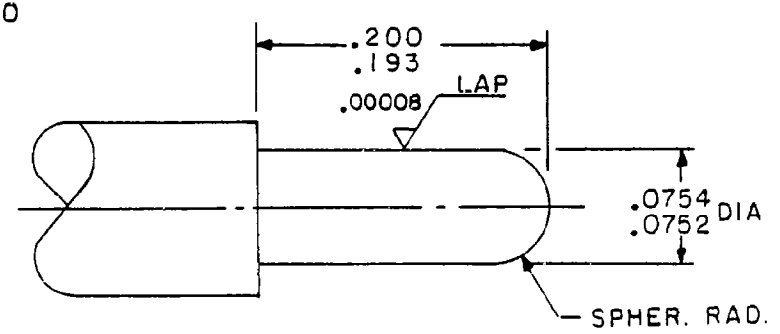

Test pin D

MATERIAL: TOOL STEEL

Inches	mm	Inches	mm
.00004	0.0010	.021	0.53
.00008	0.0020	.039	0.99
.00024	0.0061	.050	1.27
.0752	1.910	.059	1.50
.0754	1.915	.098	2.49
.0764	1.941	.110	2.79
.0766	1.946	.114	2.90
.019	0.48	.193	4.90
		.200	5.08

NOTES:
1. Dimensions are in inches.
2. Metric equivalents are given for general information only.
3. Unless otherwise specified, tolerance is ±.005 (0.13 mm).

FIGURE 7. Test pins.

REQUIREMENTS:

Dimensions and configuration: See figures 1 through 7.

Contact identification: See figure 4.

Contact retention: Coaxial and power: 11.25 pounds minimum.
Signal: 4 pounds minimum.

Mating and unmating force (per contact):

	Coaxial	Power	Signal
(Min)	7.2 ounces	3.6 ounces	0.7 ounce
(Max)	36 ounces	18 ounces	3.6 ounces

Values for each connector to be addition of contacts according to contact type.

Contact separation: 3.5 ounces minimum.

Contact resistance: 12 milliohms maximum.

Dielectric withstanding voltage:

Sea level: 1,000 V rms, 60 Hz.

High altitude: 300 V rms, 60 Hz.

Current rating:

Power contacts: 25 amperes at 25°C.

Coaxial contacts: .5 ampere at 25°C.

Signal contacts: 3 amperes at 25°C.

Keying: Moldings and mounting hardware provide 16 or 36 polarizing positions according to choice of 4 or 6 way capability. Keys are constructed in accordance with MIL-C-55302/154. Connectors are supplied keyed in "1" and "A" positions, except for 1/4-turn which are keyed "F" and "6". When required connectors can be easily keyed to desired position by using a simple wrench.

Contact Separation

Signal 0.5 ounce minimum, measured using the test pins defined in MIL-C-55302/142.

Co-Axial 0.5 ounce minimum using the following test pins

A. Insert and withdraw test pin A (see figure).
B. Insert test pin B fully and measure the separation force as the pin is withdrawn (see figure 7).

Power 1.4 ounce minimum using the following test pins

A. Insert and withdraw test pin C (see figure 7).
B. Insert test pin D fully and measure the separation force as the pin is withdrawn (see figure 7).

Removal tools: Coaxial and power contacts: M81969/41-01.
Low force contacts: M81969/40-01.

Hood types: See MIL-C-55302/155.

Mounting hardware: See MIL-C-55302/154.

Mating connectors: Shall conform to MIL-C-55302/144.

Part number: Consists of the letter M, the basic number of the specification sheet, and a dash number compiled as follows:

Example:

M55302/149 * * * 2 *

Specification sheet number
Receptacle with pin contacts

Contact arrangement
(see figure 4)

Contact terminations - 3 amperes
(see figure 4)
0 - not applicable

Contact configuration - coaxial/power
X - less coaxial and power contact

Indexing type
2 - square post (16 positions)
1 - hex post (36 positions)

Mounting hardware
(See MIL-C-55302/154)

NOTE: Revision letters are not used to denote changes due to the extensiveness of the changes.

CONCLUDING MATERIAL

Custodians:
Army - CR
Navy - EC
Air Force - 17

Review activities:
Army - AR, AT, AV, MI
Navy - AS, OS, SH
Air Force - 11, 85, 99
DLA - ES

User activities:
Army - ME
Navy - MC
Air Force - 19

Preparing activity:
Army - CR

Agent:
DLA - ES

(Project 5935-3652-10)