INCH-POUND
MIL-C-55302/154B
17 November 1988
SUPERSEDING
MIL-C-55302/154A
24 April 1981

MILITARY SPECIFICATION SHEET

CONNECTORS, PRINTED CIRCUIT SUBASSEMBLY AND ACCESSORIES: MOUNTING HARDWARE FOR PRINTED WIRING BOARDS

This specification is approved for use by all Departments and Agencies of the Department of Defense.

The requirements for acquiring the connectors described herein shall consist of this specification and the latest issue of MIL-C-55302.

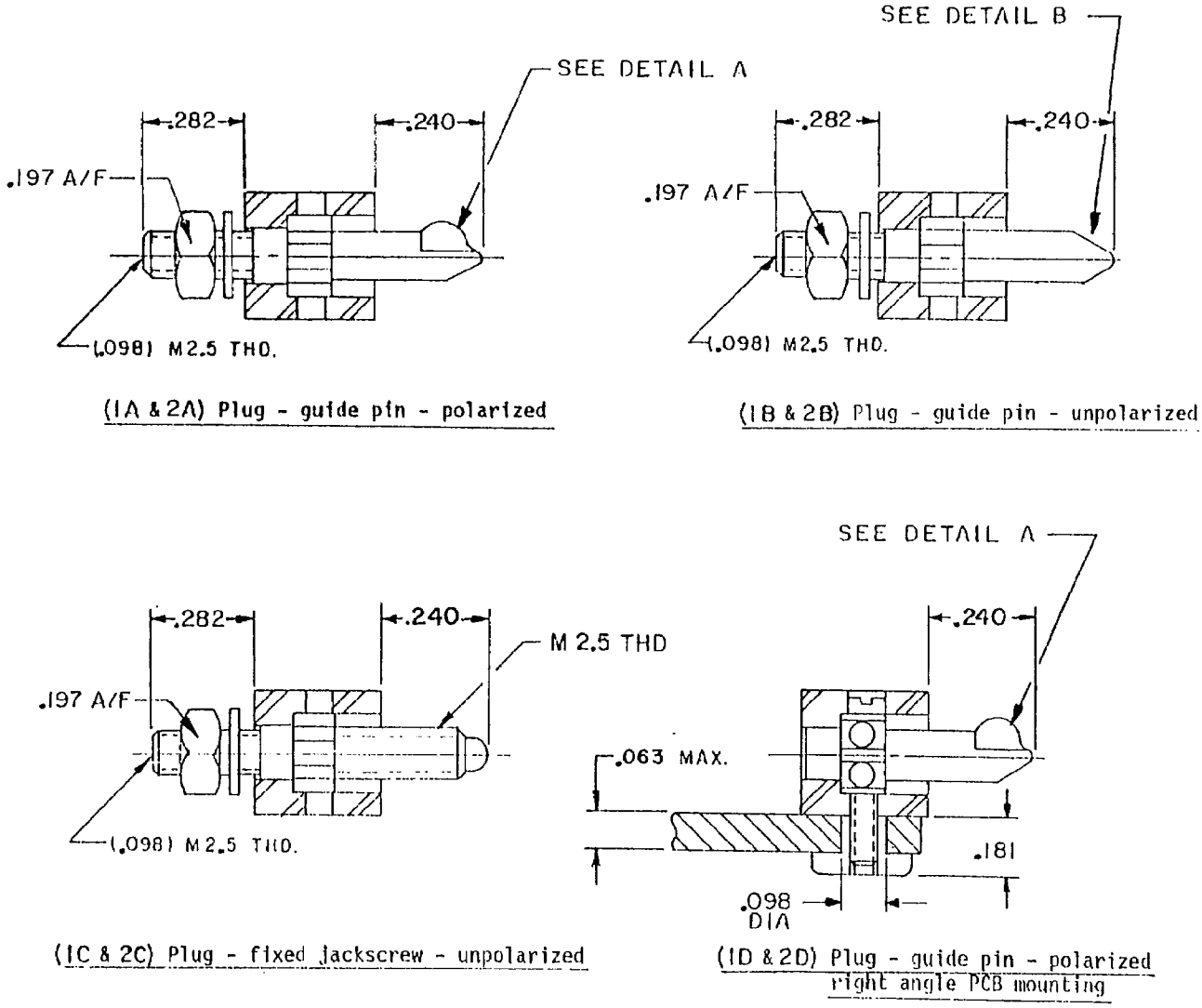

(1A & 2A) Plug - guide pin - polarized

(1B & 2B) Plug - guide pin - unpolarized

(1C & 2C) Plug - fixed jackscrew - unpolarized

(1D & 2D) Plug - guide pin - polarized right angle PCB mounting

FIGURE 1. Mounting hardware.

DISTRIBUTION STATEMENT A. Approved for public release; distribution is unlimited.

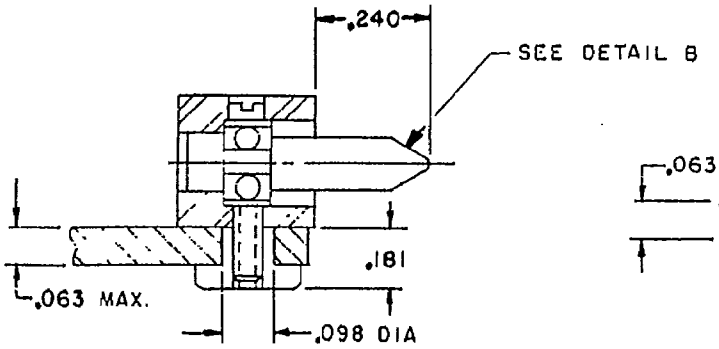

(1E & 2E) Plug - guide pin - unpolarized right angle PCB mounting

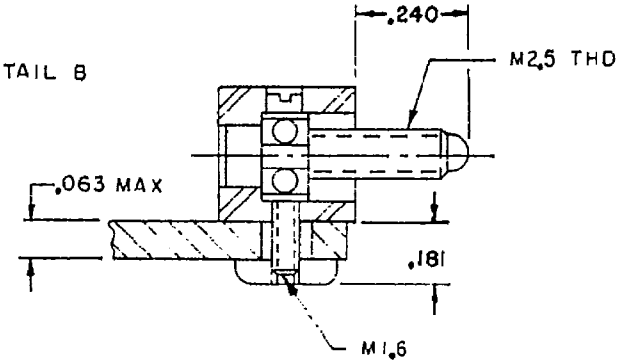

(1F & 2F) Plug - fixed jackscrew - unpolarized right angle PCB mounting

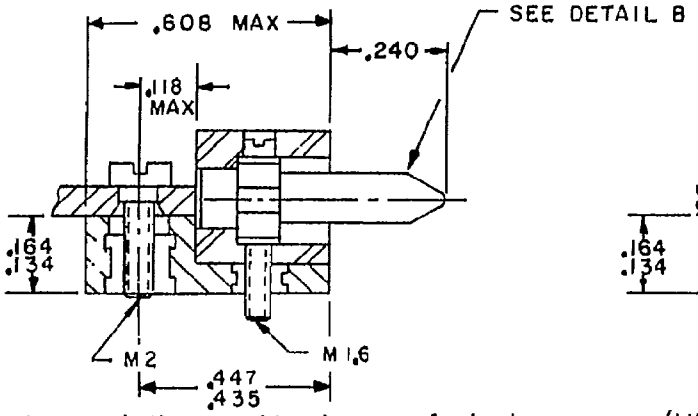

(1G & 2G) Plug - guide pin - unpolarized PCB edge mounting

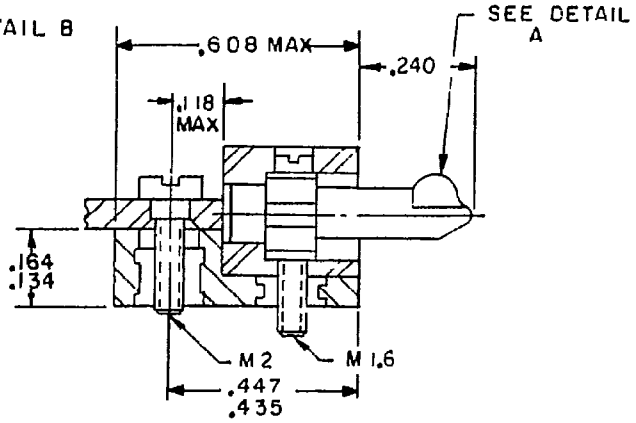

(1H & 2H) Plug - guide pin - polarized PCB edge mounting

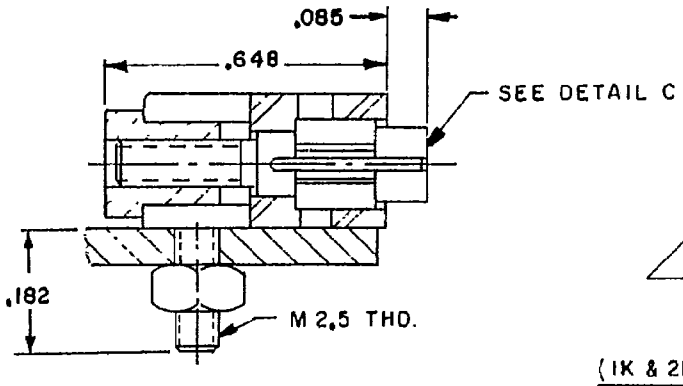

(1J & 2J) Receptacle - guide socket - polarized right angle PCB mounting

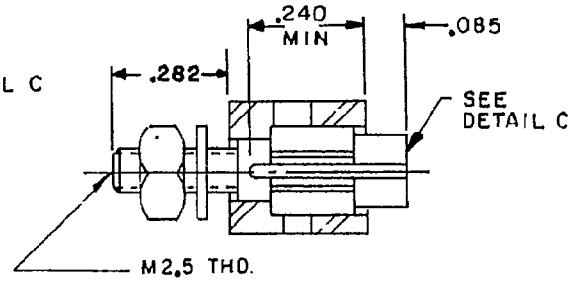

(1K & 2K) Receptacle - guide socket - polarized

FIGURE 1. Mounting hardware - Continued.

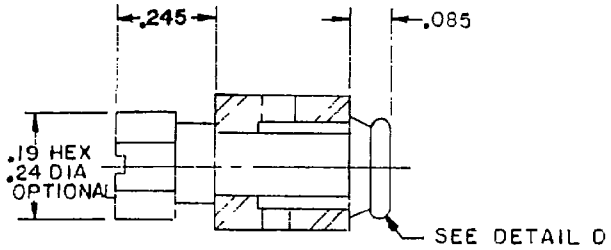

(1L & 2L) Receptacle - rotating jacksocket - unpolarized

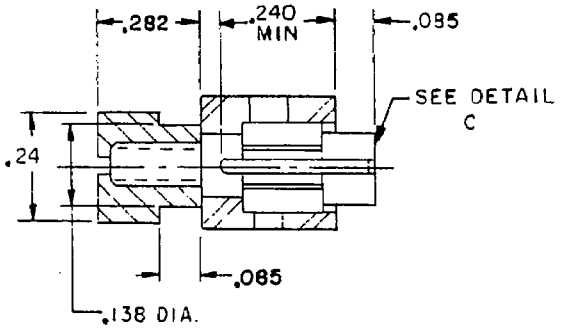

(1M & 2M) Receptacle - guide socket - floating polarized

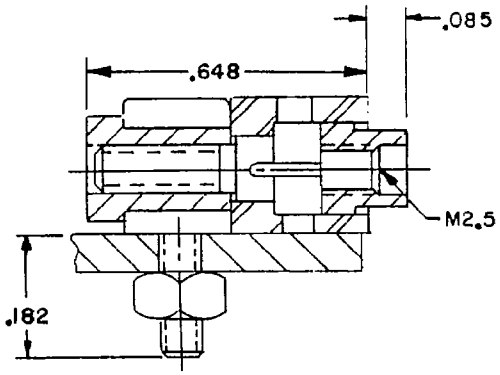

(1N & 2N) Receptacle - fixed jacksocket - polarized right angle PCB mounting

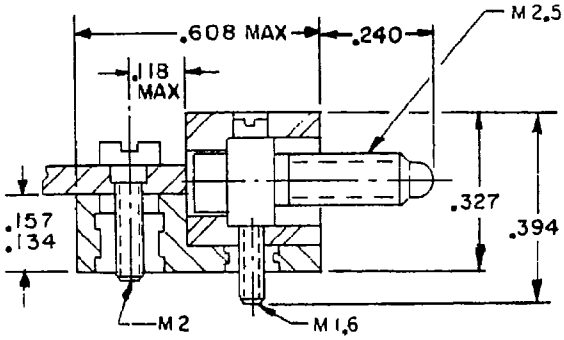

(1Q & 2Q) Plug - fixed jackscrew - unpolarized PCB edge mounting

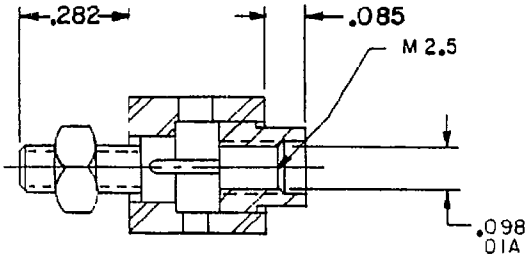

(1R & 2R) Receptacle - fixed jacksocket - polarized

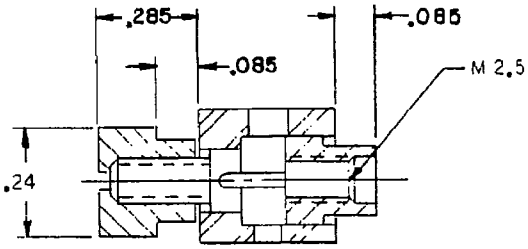

(1T & 2T) Receptacle - fixed jacksocket - floating polarized

FIGURE 1. Mounting hardware - Continued.

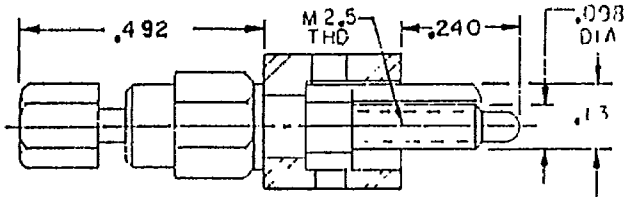

(1U & 2U) Plug - rotating jackscrew - polarized

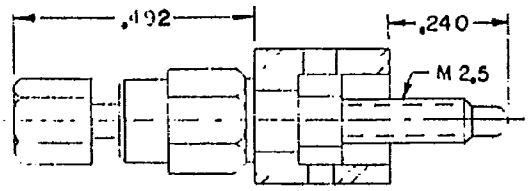

(1V & 2V) Plug - rotating jackscrew - unpolarized

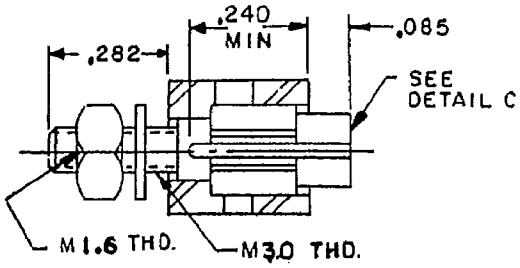

(1W & 2W) Receptacle - guide socket - polarized (cover)

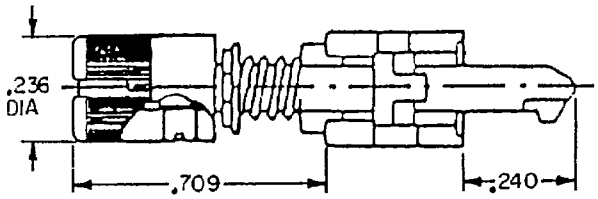

(1X) Plug - guidepin - polarized 1/4 turn locking

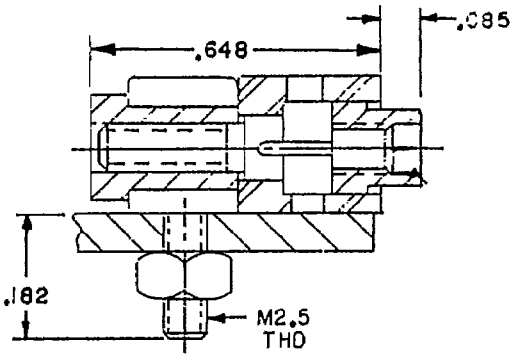

(1Y) Receptacle - 1/4 turn locking polarized right angle PCB mounting

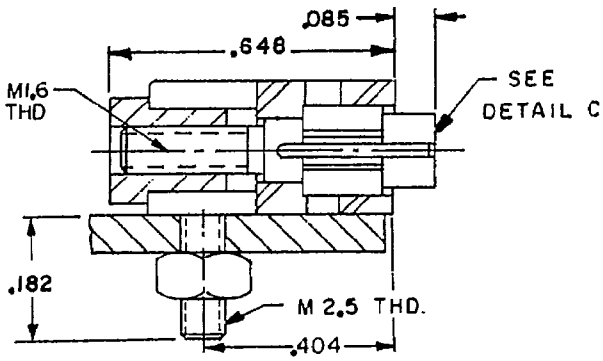

(1P & 2P) Receptable - guide socket - polarized right angle PCB mounting (cover)

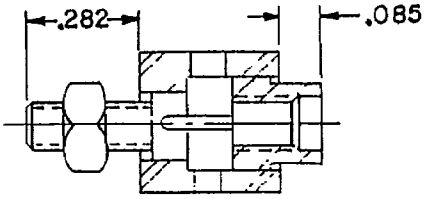

(1S) Receptacle - 1/4 turn locking polarized

FIGURE 1. Mounting hardware - Continued.

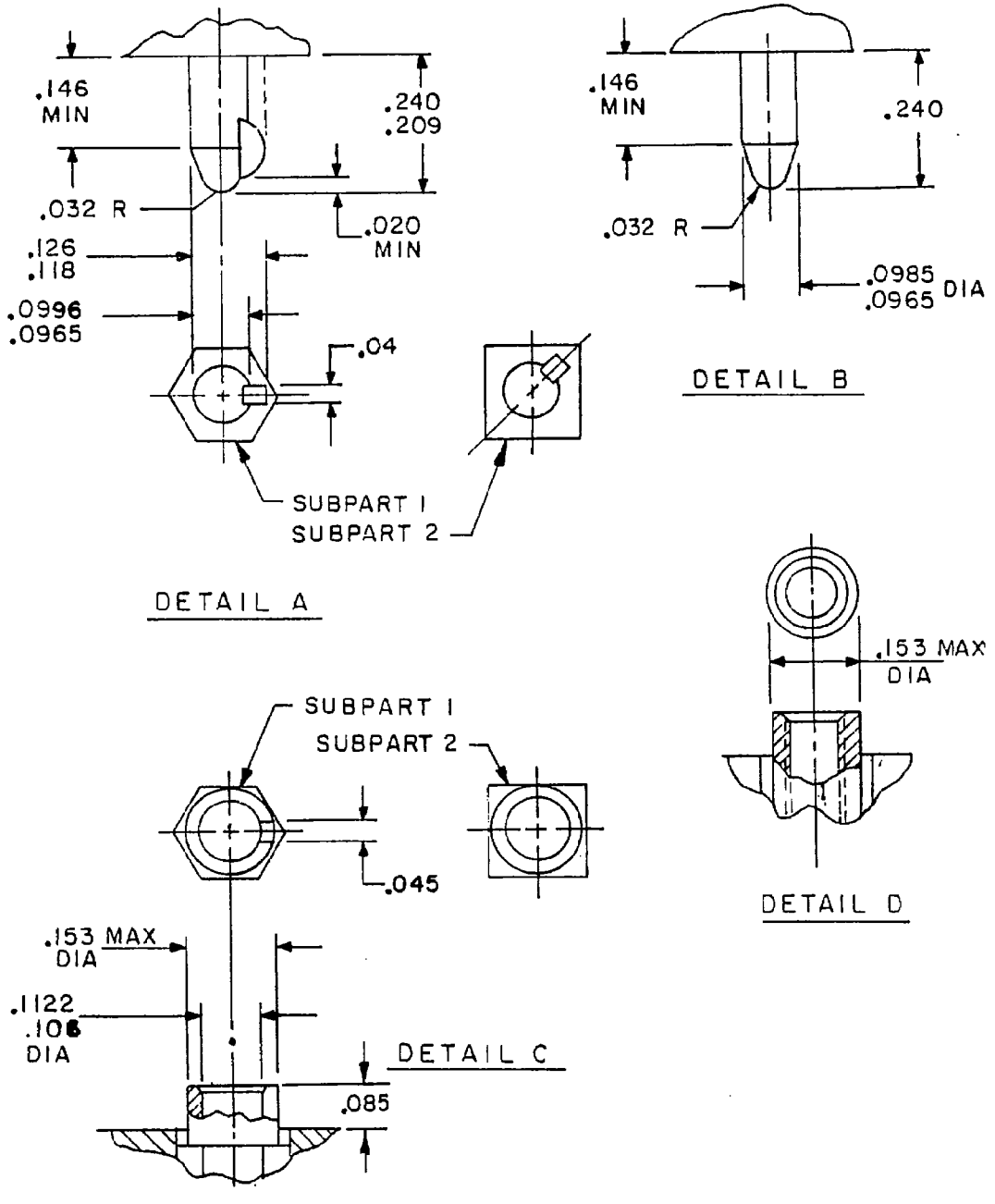

FIGURE 1. Mounting hardware - Continued.

Inches	mm	Inches	mm	Inches	mm	Inches	mm
.020	0.51	.1102	2.800	.164	4.17	.285	7.24
.032	0.81	.1122	2.850	.181	4.60	.327	8.31
.04	1.0	.118	3.00	.182	4.62	.394	10.01
.0434	1.102	.126	3.20	.19	4.8	.404	10.26
.045	1.14	.13	3.3	.197	5.00	.435	11.05
.063	1.60	.134	3.40	.209	5.31	.447	11.35
.085	2.16	.138	3.51	.236	5.99	.482	12.24
.0965	2.451	.146	3.71	.240	6.10	.492	12.50
.098	2.49	.153	3.89	.245	6.22	.608	15.44
.0985	2.502	.157	3.99	.282	7.16	.648	16.46
						.709	18.01

NOTES:
1. Dimensions are in inches.
2. Metric equivalents are given for general information only.
3. For lengths in hundredths, tolerance is ±.015 (0.38 mm), for lengths in thousandths, tolerance is ±.010 (0.25 mm).
4. Parts under subpart 1 have a hexagonal base with six polarizing positions. Parts undewr subpart 2 have a square base with four polarizing positions.
5. Only matching units of mounting hardware may be used in MIL-C-55302.
6. Mounting hardware type W and P are for use with MIL-C-55302/155 covers.
7. Unless otherwise specified, all dimensions are maximum.

TABLE I. Intermateability of hardware.

		Plug											
		A	B	C	D	E	F	G	H	Q	U	V	X
Receptacle	J	X	X		X	X		X	X				
	K	X	X		X	X		X	X				
	L			X			X			X			
	M	X	X		X	X		X	X				
	N										X	X	
	R										X	X	
	T										X	X	
	Y												X
	S												X

X-mates

FIGURE 1. Mounting hardware - Continued.

REQUIREMENTS:

Dimensions and configuration: See figure 1.

Materials and finishes: Copper alloy in accordance with QQ-B-626, composition 22, plated in accordance with QQ-N-290, grade G, for subpart number 2; stainless steel for subpart number 1.

Application: Each part number with subpart number 1 shall be interchangeable in MIL-C-55302/140 through /153. Each part number with subpart number 2 shall be interchangeable in MIL-C-55302/144 through /153.

Part number: M55302/154-1A

A - denotes different hardware styles.

1 - denotes application in type of connector.

NOTE: Revision letters are not used to denote changes due to the extensiveness of the changes.

CONCLUDING MATERIAL

Custodians:
Army - CR
Navy - EC
Air Force - 17

Review activities:
Navy - AS, OS, SH
Air Force - 11, 85, 99
DLA - ES

User activities:
Army - AR, AT, AV, ME
Navy - MC
Air Force - 19

Preparing activity:
Army - CR

Agent:
DLA - ES

(Project 5935-3652-15)