MILITARY SPECIFICATION SHEET

CONNECTORS, PRINTED CIRCUIT SUBASSEMBLY AND ACCESSORIES: LOW MATING FORCE, MALE BRUSH, STRAIGHT-THROUGH, POLARIZED, WITH WRAPPOST TERMINATION (.100 SPACING)

This specification is approved for use within the Department of the Air Force, and is available for use by all Departments and Agencies of the Department of Defense.

The requirements for acquiring the connectors described herein shall consist of this specification and the latest issue of MIL-C-55302.

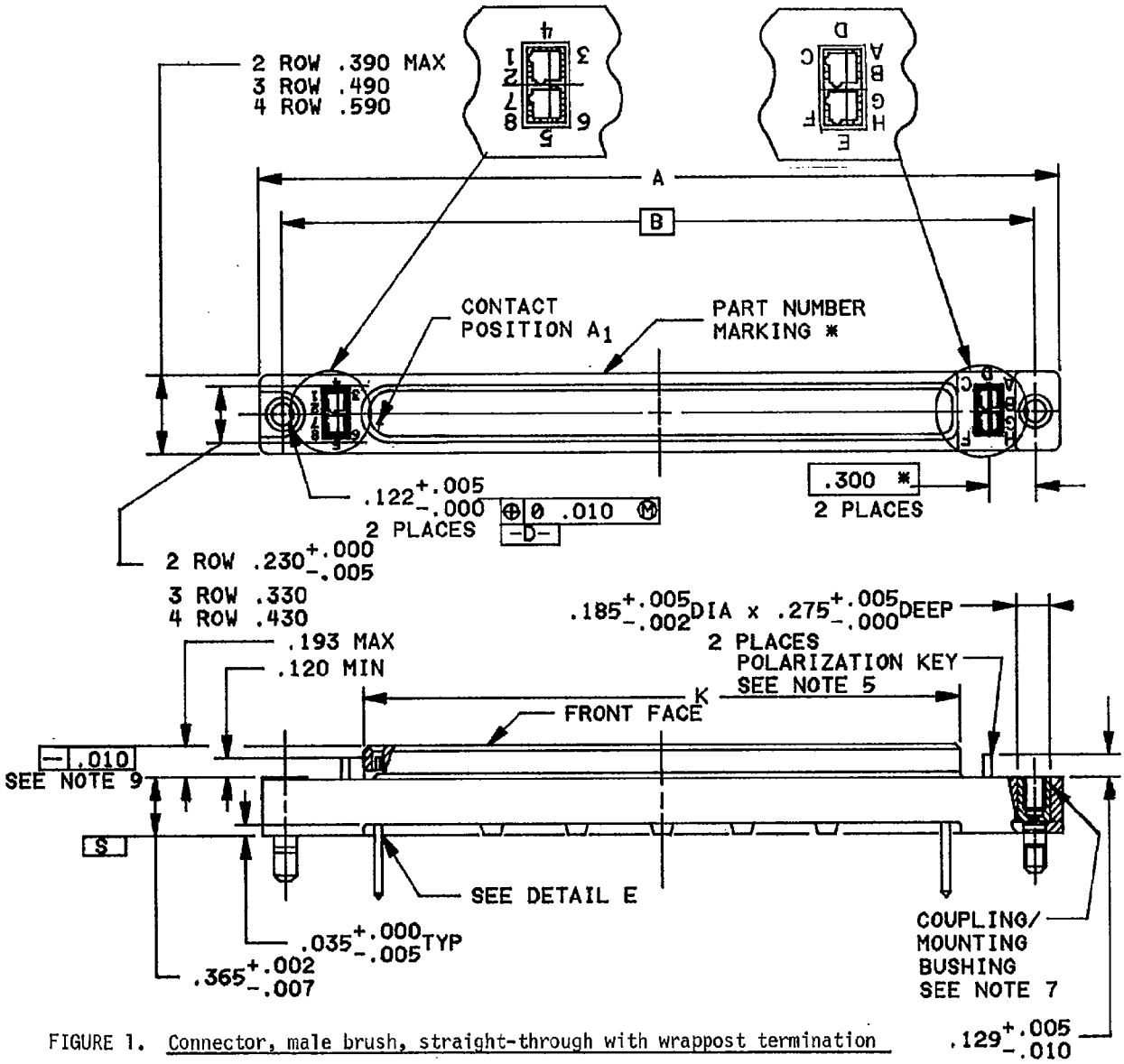

FIGURE 1. Connector, male brush, straight-through with wrappost termination .100 (2.54 mm) spacing.

Ⓐ denotes changes

DISTRIBUTION STATEMENT A. Approved for public release; distribution is unlimited.

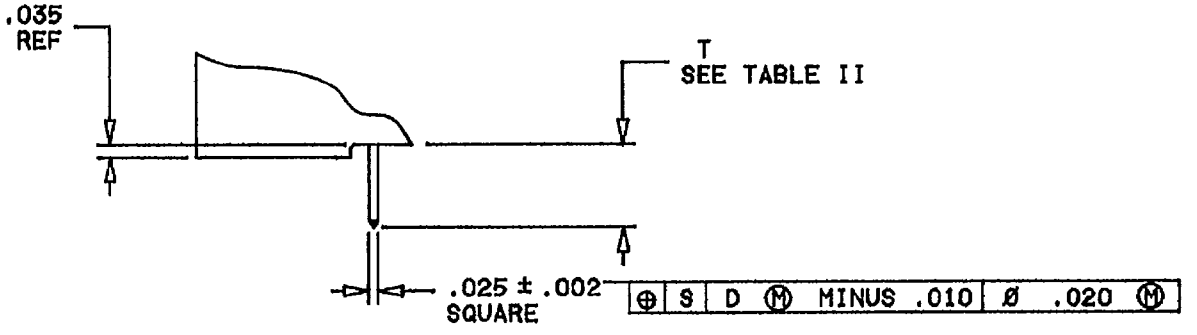

DETAIL E

Inches	mm	Inches	mm	Inches	mm	Inches	mm
.002	0.05	.035	0.89	.193	4.90	.365	9.27
.005	0.13	.112	2.84	.200	5.08	.390	9.91
.007	0.18	.120	3.04	.230	5.84	.430	10.92
.010	0.25	.122	3.10	.275	6.98	.490	12.45
.020	0.51	.129	3.28	.300	7.62	.590	14.99
.025	0.64	.185	4.70	.330	8.38		

NOTES:
1. Dimensions are in inches.
2. Metric equivalents are given for general information only.
3. Unless otherwise specified, tolerance is ±.010 (0.25 mm).
4. These connectors mate with connectors specified in MIL-C-55302/169 and MIL-C-55302/170.
5. The polarization feature, utilizing four M55302/78-02 polarizing keys which are not supplied with the connector, will provide 256 unique polarizing positions.
6. For dimensions A through K, see table I.
7. Coupling/mounting bushings are not supplied with the connector. See MIL-C-55302/172-01 and -02.
8. Contact rows are identified by molded letters on the front and rear face. Numbers indicating every fifth contact per row appear on rear face, except for arrangements consisting of 10 contacts per row which lack numerals. Up to 9 contact locations at the high numeral end of the contact row will not be identified.
9. Perfect form at MMC not required. Dimension for user installation purposes only.

FIGURE 1. Connector, male brush, straight-through with wrappost termination .100 (2.54 mm) spacing - Continued.

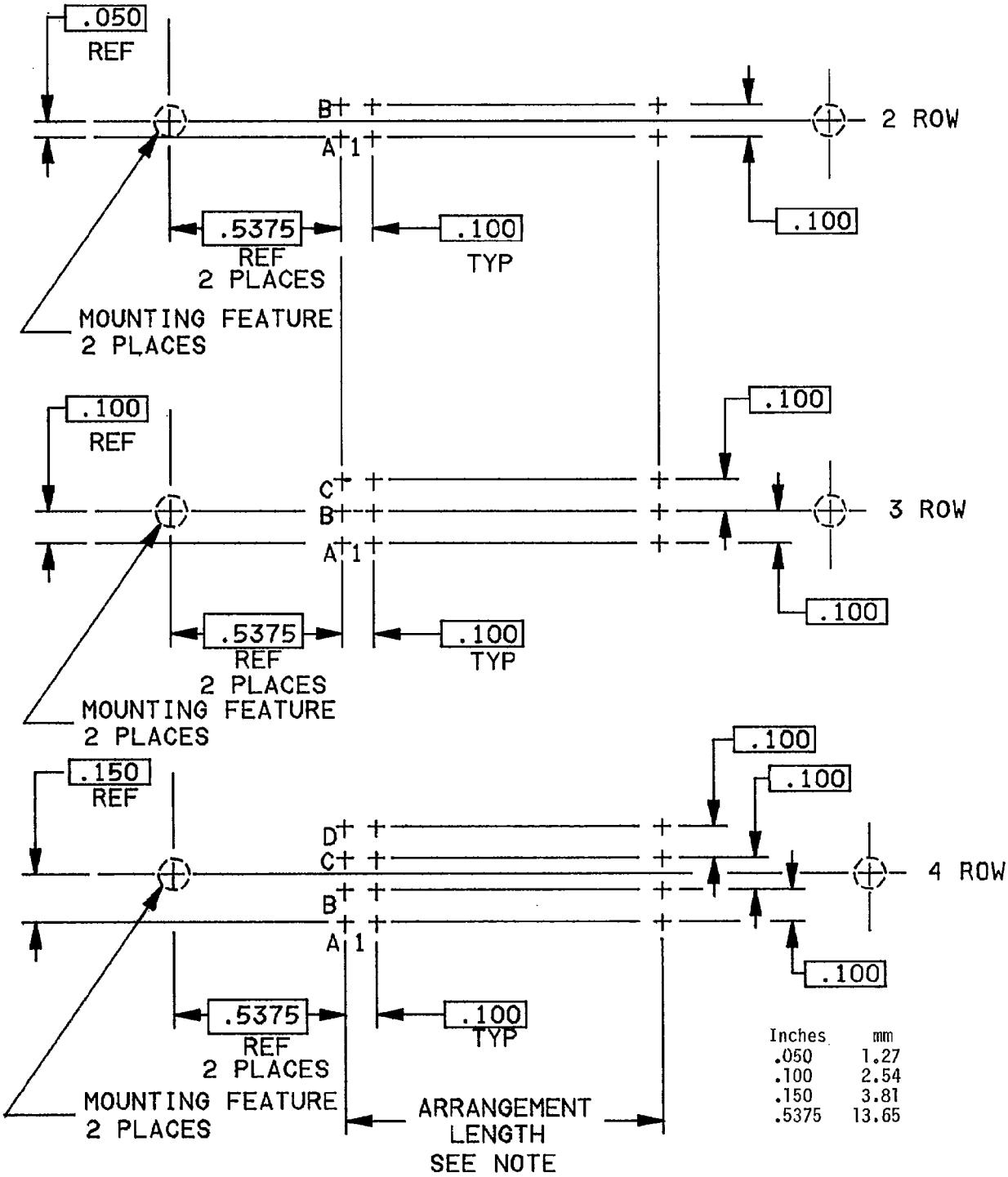

NOTES:
1. The arrangement length is determined by subtracting one contact from the number of contacts per row (see table I) and multiplying the result by 0.100 inch (2.54 mm).
2. Arrangement length = 0.100 (2.54 mm) times (N-1), where N equals the number of contacts per row.

FIGURE 2. Insert arrangement for .100 (2.54 mm) contact spacing, male brush connectors (engaging face).

REQUIREMENTS:

Dimensions and configuration: See figure 1 and tables I and II.

Contacts: Each contact shall contain 7 brush wires with a tolerance limit of ±1 providing the average outgoing quality limit (AOQL) at each tolerance extreme does not exceed 1 percent. Each brush wire diameter shall be .0073 to .0085 inch (0.185 mm to 0.216 mm).

Material:

Body: Glass filled thermoplastic molding material in accordance with MIL-M-24519, type GPT-15F.

Contacts: In accordance with MIL-C-55302 or QQ-C-502.

Plating: The contact termination plating shall be in accordance with table III. Brush wire plating shall be gold in accordance with MIL-G-45204, type II, grade C, class 1 over nickel in accordance with QQ-N-290. Cut ends of brush wires need not be plated.

Contact identification: See figure 1 (note 8) and figure 2.

Oversized pin exclusion: Not applicable.

Contact engagement and separation forces: Not applicable, see mating and unmating.

Mating and unmating: The maximum mating and unmating force shall be 1.5 ounces times the total number of contacts.

Ⓐ Contact current rating: The connector may have any combination of current flow and ambient temperature provided the contact or connector temperature does not exceed 125°C. The test current shall be 5 amperes for individually connected contacts and 3 amperes for series wired contacts.

Contact resistance: The average resistance of all contact pairs measured on row A contacts shall not exceed 0.016 ohm, and no individual pair shall have a resistance exceeding 0.020 ohm. To allow for increased terminal lengths, add 0.001 ohm for each contact row beyond row A. The point of measurement shall be the point of terminal exit from the printed wiring board.

Contact retention: 3 pounds per contact minimum when the force is applied in the forward direction. The displacement shall not exceed 0.005 (0.13 mm). The displacement shall be recorded after a 1 pound preload is used to determine the zero displacement reference.

Dielectric withstanding voltage:

Sea level: 1,300 volts rms, 60 Hz, ac.

High altitude: 325 volts rms, 60 Hz, ac.

Extended contact life: Connector shall meet the performance requirements of MIL-C-55302, contact life, when subjected to 20,000 insertion and withdrawal cycles during qualification inspection.

Insert arrangement: See figure 2.

Part number: Consists of the letter M, the basic number of the specification sheet, and a dash number compiled as follows:

Example:

M55302/167 B 18 Y 2

Specification sheet number

Number of rows (indicator)
(see table I for row indicator)

Number of contacts per row
(see table I for contact indicator)

.700 ±.025 contact tail termination length
(see table II for indicator)

Gold plated contact tails
(see table III for indicator)

User instructions: Each shipment of connectors shall include, as a minimum, instructions for: Coupling/mounting bushing usage, polarization key usage and electrical probing information.

TABLE I. Indicators and dimensions. Ⓐ

2 Contact rows		3 Contact rows		4 Contact rows		Dimensions 1/		
Indicator	Total contacts	Indicator	Total contacts	Indicator	Total contacts	A Max	|B|	+.004 K -.006
A10 2/	20	B10 2/	30	C10 2/	40	2.295	1.975	1.115
A11	22	B11	33	C11	44	2.395	2.075	1.215
A12	24	B12	36	C12	48	2.495	2.175	1.315
A13	26	B13	39	C13	52	2.595	2.275	1.415
A14	28	B14	42	C14	56	2.695	2.375	1.515
A15	30	B15	45	C15	60	2.795	2.475	1.615
A16	32	B16	48	C16	64	2.895	2.575	1.715
A17	34	B17	51	C17	68	2.995	2.675	1.815
A18	36	B18	54	C18	72	3.095	2.775	1.915
A19	38	B19	57	C19	76	3.195	2.875	2.015
A20	40	B20	60	C20	80	3.295	2.975	2.115
A21	42	B21	63	C21	84	3.395	3.075	2.215
A22	44	B22	66	C22	88	3.495	3.175	2.315
A23	46	B23	69	C23	92	3.595	3.275	2.415
A24	48	B24	72	C24	96	3.695	3.375	2.515
A25	50	B25	75	C25	100	3.795	3.475	2.615
A26	52	B26	78	C26	104	3.895	3.575	2.715
A27	54	B27	81	C27	108	3.995	3.675	2.815
A28	56	B28	84	C28	112	4.095	3.775	2.915
A29	58	B29	87	C29	116	4.195	3.875	3.015
A30	60	B30	90	C30	120	4.295	3.975	3.115
A31	62	B31	93	C31	124	4.395	4.075	3.215
A32	64	B32	96	C32	128	4.495	4.175	3.315
A33	66	B33	99	C33	132	4.595	4.275	3.415
A34	68	B34	102	C34	136	4.695	4.375	3.515
A35	70	B35	105	C35	140	4.795	4.475	3.615
A36	72	B36	108	C36	144	4.895	4.575	3.715
A37	74	B37	111	C37	148	4.995	4.675	3.815
A38	76	B38	114	C38	152	5.095	4.775	3.915
A39	78	B39	117	C39	156	5.195	4.875	4.015
A40	80	B40	120	C40	160	5.295	4.975	4.115
A41	82	B41	123	C41	164	5.395	5.075	4.215
A42	84	B42	126	C42	168	5.495	5.175	4.315
A43	86	B43	129	C43	172	5.595	5.275	4.415
A44	88	B44	132	C44	176	5.695	5.375	4.515
A45	90	B45	135	C45	180	5.795	5.475	4.615
A46	92	B46	138	C46	184	5.895	5.575	4.715

See footnotes at end of table.

TABLE I. Indicators and dimensions - Continued. Ⓐ

2 Contact rows		3 Contact rows		4 Contact rows		Dimensions 1/		
Indicator	Total contacts	Indicator	Total contacts	Indicator	Total contacts	A Max	|B|	+.004 K -.006
2/		2/		2/				
A47	94	B47	141	C47	188	5.995	5.675	4.815
A48	96	B48	144	C48	192	6.095	5.775	4.915
A49	98	B49	147	C49	196	6.195	5.875	5.015
A50	100	B50	150	C50	200	6.295	5.975	5.115
A51	102	B51	153	C51	204	6.395	6.075	5.215
A52	104	B52	156	C52	208	6.495	6.175	5.315
A53	106	B53	159	C53	212	6.595	6.275	5.415
A54	108	B54	162	C54	216	6.695	6.375	5.515
A55	110	B55	165	C55	220	6.795	6.475	5.615
A56	112	B56	168	C56	224	6.895	6.575	5.715
A57	114	B57	171	C57	228	6.995	6.675	5.815
A58	116	B58	174	C58	232	7.095	6.775	5.915
A59	118	B59	177	C59	236	7.195	6.875	6.015
A60	120	B60	180	C60	240	7.295	6.975	6.115
A61	122	B61	183	C61	244	7.395	7.075	6.215
A62	124	B62	186	C62	248	7.495	7.175	6.315
A63	126	B63	189	C63	252	7.595	7.275	6.415
A64	128	B64	192	C64	256	7.695	7.375	6.515
A65	130	B65	195	C65	260	7.795	7.475	6.615
A66	132	B66	198	C66	264	7.895	7.575	6.715
A67	134	B67	201	C67	268	7.995	7.675	6.815
A68	136	B68	204	C68	272	8.095	7.775	6.915
A69	138	B69	207	C69	276	8.195	7.875	7.015
A70	140	B70	210	C70	280	8.295	7.975	7.115
A71	142	B71	213	C71	284	8.395	8.075	7.215
A72	144	B72	216	C72	288	8.495	8.175	7.315
A73	146	B73	219	C73	292	8.595	8.275	7.415
A74	148	B74	222	C74	296	8.695	8.375	7.515
A75	150	B75	225	C75	300	8.795	8.475	7.615
A76	152	B76	228	C76	304	8.895	8.575	7.715
A77	154	B77	231	C77	308	8.995	8.675	7.815
A78	156	B78	234	C78	312	9.095	8.775	7.915
A79	158	B79	237	C79	316	9.195	8.875	8.015
A80	160	B80	240	C80	320	9.295	8.975	8.115
A81	162	B81	243	C81	324	9.395	9.075	8.215
A82	164	B82	246	C82	328	9.495	9.175	8.315
A83	166	B83	249	C83	332	9.595	9.275	8.415
A84	168	B84	252	C84	336	9.695	9.375	8.515
A85	170	B85	255	C85	340	9.795	9.475	8.615
A86	172	B86	258	C86	344	9.895	9.575	8.715
A87	174	B87	261	C87	348	9.995	9.675	8.815
A88	176	B88	264	C88	352	10.095	9.775	8.915
A89	178	B89	267	C89	356	10.195	9.875	9.015
A90	180	B90	270	C90	360	10.295	9.975	9.115
A91	182	B91	273	C91	364	10.395	10.075	9.215
A92	184	B92	276	C92	368	10.495	10.175	9.315
A93	186	B93	279	C93	372	10.595	10.275	9.415
A94	188	B94	282	C94	376	10.695	10.375	9.515
A95	190	B95	285	C95	380	10.795	10.475	9.615
A96	192	B96	288	C96	384	10.895	10.575	9.715
A97	194	B97	291	C97	388	10.995	10.675	9.815
A98	196	B98	294	C98	392	11.095	10.775	9.915
A99	198	B99	297	C99	396	11.195	10.875	10.015
A00	200	B00	300	C00	400	11.295	10.975	10.115

1/ All dimensions are in inches. Metric equivalents may be calculated based on 1 inch = 25.4 mm.

2/ Indicators consist of, a letter designating number of contact rows and two digits indicating number of contacts per row. Indicators A00, B00, and C00 denote 100 contacts per row.

TABLE II. Contact tail termination length.

Indicator	T dimension
Z	.542 ±.025
Y	.700 ±.025

TABLE III. Contact tail plating.

Indicator	Plating
1	Tin lead per MIL-P-81728, 50 to 70 percent tin, .0001 minimum thick over copper per MIL-C-14550
2	Gold per MIL-G-45204, type II, grade C, class 00 over nickel per QQ-N-290

Custodian:
Air Force - 17

Review activities:
Air Force - 11, 85, 99

User activity:
Air Force - 19

Preparing activity:
Air Force - 17

Agent:
DLA - ES

(Project 5935-F291-02)