MILITARY SPECIFICATION SHEET

CONNECTORS, PRINTED CIRCUIT SUBASSEMBLY AND ACCESSORIES: HARDWARE, COUPLING AND LOCKING

This specification is approved for use by the Department of the Air Force, and is available for use by all Departments and Agencies of the Department of Defense.

The complete requirements for acquiring the connectors described herein shall consist of this specification and the latest issue of MIL-C-55302.

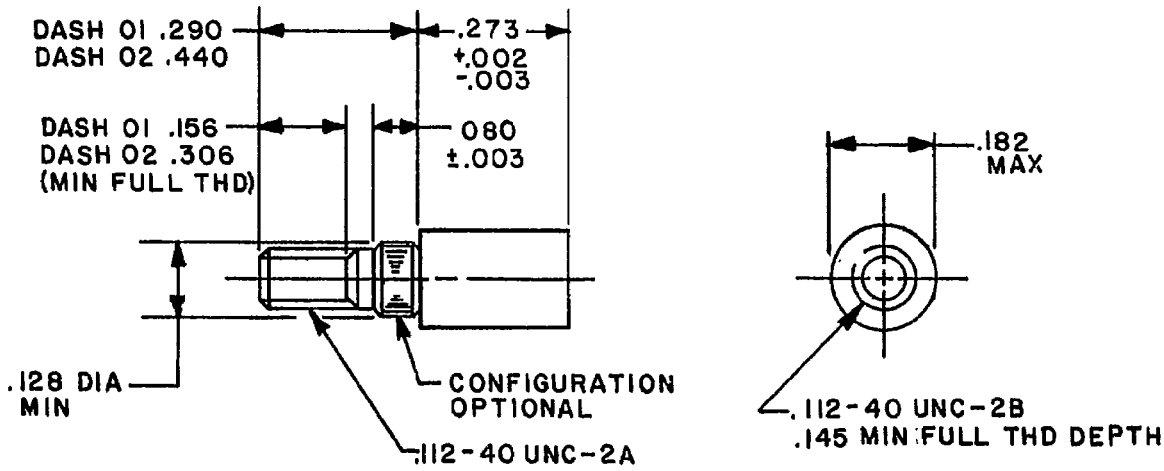

INCHES	MM	INCHES	MM
.002	0.05	.156	3.96
.003	0.08	.182	4.62
.080	2.03	.273	6.93
.112	2.84	.290	7.37
.128	3.25	.306	7.72
.145	3.68	.440	11.18

FIGURE 1. Coupling bushing.

FSC 5935

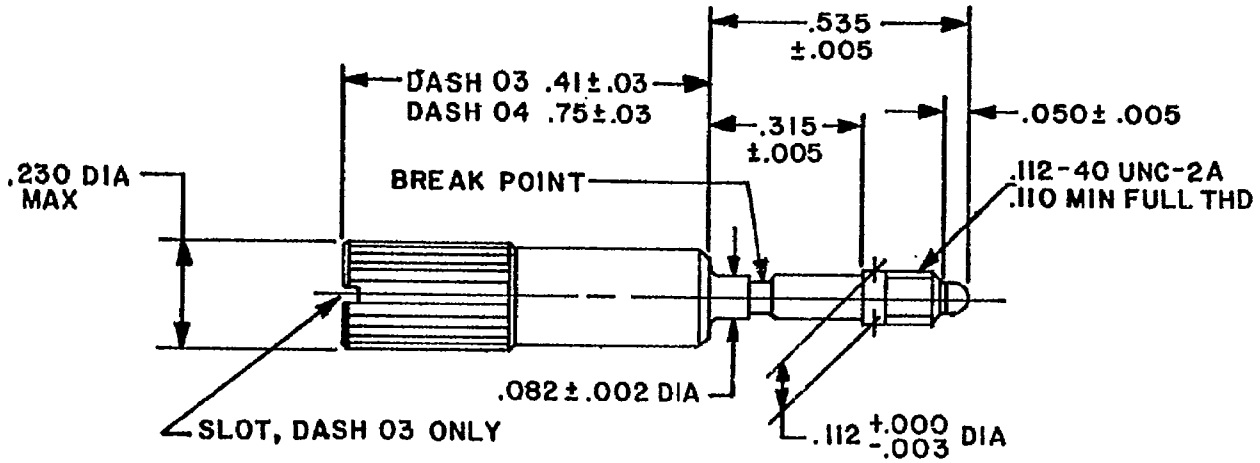

INCHES	MM	INCHES	MM
.000	0.00	.110	2.79
.002	0.51	.112	2.84
.003	0.08	.230	5.84
.005	0.13	.315	8.00
.03	0.8	.41	10.41
.050	1.27	.535	13.59
.082	2.08	.75	19.1

FIGURE 2. Locking screw.

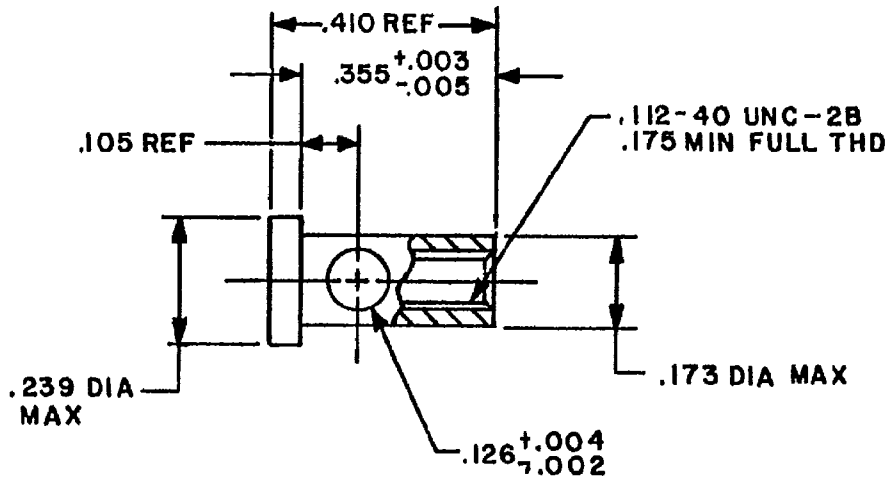

INCHES	MM	INCHES	MM
.002	0.51	.126	3.20
.003	0.08	.175	4.45
.004	0.10	.239	6.07
.005	0.13	.355	9.02
.105	2.67	.410	10.41
.112	2.84		

FIGURE 3. Locking bushing.

REQUIREMENTS:

Dimensions and configuration: See figures.

Material: Stainless steel in accordance with MIL-C-55302.

Part number: M55302/172-(dash number from table I).

Used in connectors: See table I.

User instructions: Each shipment of hardware shall include, as a minimum, instructions for coupling/mounting bushing usage.

TABLE I. Dash numbers.

Dash number	Figure	Description	Used in connectors	Quantity required
01	1	Coupling bushing	M55302/166 & M55302/167	2
02	1	Coupling bushing	M55302/166 & M55302/167	2
03	2	Locking screw	M55302/169	2
04	2	Locking screw	M55302/169	2
05	3	Locking bushing	M55302/168	2

Custodian:
Air Force - 17

Review activities:
Air Force - 11, 85, 99

User activity:
Air Force - 19

Agent:
DLA - ES

Preparing activity:
Air Force - 17

(Project 5935-F240-07)